South African Journal of Business Management
ISSN: (Online) 2078-5976, (Print) 2078-5585

Internal marketing, perceived value and satisfied employees in South African long-term insurance

Authors:
Kathleen Storey[1]
Isolde Lubbe[1]
Mornay Roberts-Lombard[2]

Affiliations:
[1]Department of Marketing Management, College of Business and Economics, University of Johannesburg, Johannesburg, South Africa

[2]Private Consultant, Cape Town, South Africa

Corresponding author:
Kathleen Storey,
kathleens@uj.ac.za

Dates:
Received: 08 June 2025
Accepted: 17 Nov. 2025
Published: 13 Jan. 2026

How to cite this article:
Storey, K., Lubbe, I., & Roberts-Lombard, M. (2026). Internal marketing, perceived value and satisfied employees in South African long-term insurance. *South African Journal of Business Management, 57*(1), a5433. https://doi.org/10.4102/sajbm.v57i1.5433

Copyright:
© 2026. The Authors. Licensee: AOSIS. This work is licensed under the Creative Commons Attribution 4.0 International (CC BY 4.0) license (https://creativecommons.org/licenses/by/4.0/).

Read online:
Scan this QR code with your smart phone or mobile device to read online.

Purpose: This study assessed the interrelationships between internal marketing, employees' perceived value within the employment exchange and the resultant employee satisfaction. These interrelationships focused on the financial advisers in the South African long-term insurance industry.

Design/methodology/approach: Data were gathered from financial advisers across twenty registered South African long-term insurance providers. The questionnaires, using a Likert scale, were self-administered. In total, 410 financial advisers voluntarily participated in the study. The data analysis included descriptive statistical analysis, with structural equation modelling (SEM) for the measurement and structural models.

Findings/results: The findings reveal that financial advisers perceive value when internal people and internal political power elements are effectively implemented through internal marketing. The findings also show that when internal marketing is implemented effectively, it has a positive influence on financial adviser value and satisfaction.

Practical implications: In considering these findings, South African Financial Services Providers can design internal marketing framework elements that enhance the value financial advisers perceive in the employment exchange, increasing their satisfaction and in turn reducing the high turnover that is characteristic of the industry.

Originality/value: Although internal marketing is being used by Financial Services Providers in the South African market, this study provides guidance on strategic implementation to increase employee satisfaction.

Keywords: internal marketing; perceived value; employee satisfaction; financial advisers; internal people; internal political power; long-term insurance.

Introduction

Amid heightened regulations and a sales-centric milieu, Financial Services Providers (FSPs) globally grapple with the challenge of retaining financial advisers (Eckert & Osterrieder, 2020; Van der Merwe et al., 2020), including those in South Africa (Rautenbach, 2020; Van der Merwe et al., 2020). As the industry faces a talent crunch, internal marketing emerges as a potential remedy (KPMG, 2021:11; PricewaterhouseCoopers [PwC], 2023; Van der Merwe et al., 2020). Internal marketing addresses employees' needs to boost motivation, make them feel valued and encourage them to stay with the company (Qiu et al., 2022). Perceived value may be positioned as a bridge between internal marketing and employee satisfaction (Ladzani & Roberts-Lombard, 2019; Solnet et al., 2019).

Internal marketing principles have not been fully explored within the South African financial services industry (Van der Merwe et al., 2020). Although widely adopted in Western markets (De Bruin et al., 2021), the application remains limited in the South African financial services industry, with studies mainly focusing on remuneration (Redelinghuys, 2017) and advisers' personality traits (Rautenbach, 2020). The ultimate goal of internal marketing in such a sales-centric environment is to translate its implementation into employee satisfaction. While the previous studies have examined remuneration and personality as retention factors, how internal marketing shapes employees' value perception within highly regulated, sales-driven environments has been overlooked. This study now explores internal marketing's role in perceived value and overall employee satisfaction. This study delves into the perceived value derived from both conventional and emergent internal marketing strategies, as seen through the lens of financial advisers. It includes exploring the interconnectedness between internal marketing practices, employee perceived value and the overall satisfaction of financial advisers.

This article begins by positioning the need for the study within the South African context, addressing a critical research gap by examining how internal marketing may influence South African financial advisers' perceived value and overall satisfaction, an area of internal marketing that is empirically unexplored. The motivation for this study stems from a lack of available secondary research on internal marketing in the South African context, as an emerging market in Africa. This study seeks to inform the industry on: (1) the effectiveness of internal marketing implementation in the South African long-term insurance industry, (2) whether internal marketing programmes align with the needs of the employees being targeted and (3) the potential for an expanded internal marketing framework to enhance the perceived value and satisfaction of employees in the long-term insurance industry.

The following sections detail the grounding theories supporting the study, the hypothesised relationships tested and the proposed theoretical model investigated. A review of the chosen research methodology, analysis results, academic and industry contributions and managerial implications are then included.

Literature review and hypothesis development

The internal marketing framework allows employers to create an internal environment where employees feel valued and motivated (Raj, 2021). To provide a foundation for understanding the relationship between internal marketing, perceived value and employee satisfaction, the review includes an outline of the hypotheses and presents the theoretical model supporting this investigation.

Internal marketing framework elements

Scholars suggest that the traditional internal marketing framework consists of internal product, internal price, internal place and internal promotion and can be expanded to enrich the relationship value of employer–employee interactions (Grönroos, 2020; Nemteanu & Dabija, 2021). For the study, two additional elements were proposed, namely internal personal relationships, and internal political power be added to an expanded internal marketing framework. Yi et al. (2023) present internal personal relationships as interactions with others in the employment exchange that lead to feelings of trust and belonging. Internal political power, introduced by De Bruin et al. (2021), is the ability to gain favour, among others, within the employment exchange. Each element is a catalyst, fostering robust internal relationships, enhancing employee value, satisfaction and well-being, ultimately contributing to the organisation's goals (De Bruin et al., 2021; Yi et al., 2023).

The components of the internal marketing framework are designed to offer value through the employers' acknowledgement of, and provision for, the employees' needs (Yi et al., 2023). Highlighting the benefits employees receive from the employment exchange, the intention is to make those benefits look more valuable in relation to the sacrifices employees feel they incur by participating in the employment exchange. With financial advisers being such a sought-after resource, an FSP must offer more value to financial advisers than their competitors (Rautenbach, 2020; Van der Merwe et al., 2020). Financial advisers look for employment opportunities that offer more value (Naicker N 2022, personal communication, June 08).

Validating the inclusion of additional relational elements in internal marketing

Internal marketing is a relationship-building tool (Ed. Dadwal, 2019), and this study's focus is on enhancing the relational contribution of internal marketing, through the inclusion of internal personal relationships and internal political power, to enhance the value perceived in the employment exchange (Berthelsen et al., 2019).

Internal personal relationships fulfil employees' social needs for inclusion in the workplace (Filstad et al., 2019). This is evident among financial advisers in the South African long-term insurance sector, where sociability is considered an essential personality characteristic (Naicker N 2022, personal communication, June 08). From a relationship marketing standpoint, when an employee feels included and connected to their peers, they perceive additional value as their need for affiliation is met (Solnet et al., 2019).

In internal marketing, internal political power denotes employees' influence within the organisation, extending beyond hierarchical authority to include shaping policies and culture (Yi et al., 2023). Employees with internal political power perceive benefits because of their influence over others in the work setting (Lin et al., 2019). For financial advisers, leveraging such influence can further their careers. One study reveals that financial advisers who have in-group status with management are less likely to be punished for misconduct (Egan et al., 2022). Influential workplace relationships consequently elevate employee satisfaction (Bunner et al., 2019). In relationship marketing terms, employees may perceive added value with preferential access to information, inclusion in incentive programmes and generally being treated more leniently than other employees.

Traditional internal marketing framework elements and financial advisers' perceived value

The internal product represents the work duties performed by the employee, the perceived meaningfulness of those duties and the employee needs that are fulfilled with the completion of those duties (Chaolertseree & Taephant, 2020; Yi et al., 2023). Work duties satisfy the fundamental needs of employees in the employment exchange because without duties to perform, there is no basis for employment or remuneration (Qiu et al., 2022; Yi et al., 2023). Employees should enjoy their work duties and find work rewarding (Rautenbach, 2020). The value perceived in the employment

exchange is affected by the design of the internal product in terms of the employee's needs (Van Tonder & Petzer, 2018). Internal product is positioned as adding to employee perceived value through personal enrichment and career development (Dabirian et al., 2019; Jung & Suh, 2019).

Internal price represents the financial benefit obtained through the employment exchange (Solnet et al., 2019). The payment that employees receive for their services includes their salary, commission, other benefits and/or incentives, or any combination of these. Internal price is tied to internal product as payment is determined by the duties performed (Mura et al., 2019). The internal price directly reflects the value obtained from the employment exchange, as it is the financial benefit obtained from the exchange (Solnet et al., 2019).

Internal place denotes the working environment where employees perform their duties. Internal place includes all aspects of the physical workplace where the duties defined by the internal product are performed. This includes the working conditions and the ease of access to the necessary work processes (Frye et al., 2020). The appeal of the workspace, the ease of access to operating systems or equipment and the flow of work, all influence how the employee performs within the workplace (Saurombie et al., 2022; Ullah & Ahmad, 2017). Research shows that stress-inducing workplaces, for example, reduce the value employees perceive in the employment exchange (Frone & Blais, 2019), while working-from-home alternatives increase the value employees perceive (Bolisani et al., 2020; Dabirian et al., 2019).

Internal promotion is a powerful tool used to implement the rest of the internal marketing framework elements and includes all internal communication spanning the organisation (Gwinji et al., 2020). Internal promotion increases the perceived value of the employment exchange as the tool for communicating the other benefits the employer has to offer employees (Bussin & Mouton, 2019). The internal communications that result offer other value-increasing benefits, such as socialisation and improved morale (Dabirian et al., 2019; Jung & Suh, 2019; Yi et al., 2023).

The literature affirms the strategic importance of internal marketing in cultivating motivated and valued employees. This is imperative within the South African long-term insurance industry, where FSPs face the ongoing challenge of adviser-retention. It is established that traditional internal marketing framework elements do contribute towards employees' perceived value in the employment exchange (Solnet et al., 2019; Yi et al., 2023), which in turn enhances satisfaction and thus commitment (Bunner et al., 2019). However, in sales-driven service contexts such as long-term insurance, employees seek additional relational benefits. This need leads to the proposed expanded internal marketing framework to increase perceived value and employee satisfaction for South African financial advisers.

Therefore, the following hypotheses are proposed:

H1: There is a significant positive relationship between the internal marketing framework product element and the perceived value that financial advisers receive from their employer.

H2: There is a significant positive relationship between the internal marketing framework price element and the perceived value that financial advisers receive from their employer.

H3: There is a significant positive relationship between the internal marketing framework place element and the perceived value that financial advisers receive from their employer.

H4: There is a significant positive relationship between the internal marketing framework promotion element and the perceived value that financial advisers receive from their employer.

Service-oriented internal marketing framework elements and financial advisers' perceived value

The first service-oriented element, i.e., internal people, represents employees interacting with other people in the employment exchange. Interactions occur between colleagues, peers and superiors and between departments (Qiu et al., 2022; Yi et al., 2023). The value employees perceive in the employment exchange is affected by their interactions with other people participating in the exchange (Grönroos, 2017). The value-increasing benefit of socialisation is noted under internal promotion, and internal people is a requirement for such socialisation to take place (Dabirian et al., 2019; Jung & Suh, 2019).

Internal processes encapsulate how activities are performed in an organisation (Ullah & Ahmad, 2017). Various processes impact the employees' perceptions of the employment exchange, including the recruitment process and the processes utilised by the employee to perform the duties required by the internal product (Rautenbach, 2020). Perceived value will increase with internal processes that are easy to use and improve efficiency (De Bruin, 2019).

Internal physical evidence represents all the tangible aspects of the employment exchange. The functionality and appearance of the workplace, documents and operating systems impact the ability of employees to perform their duties well, thus increasing the value perceived (Mocke A 2022, personal communication, June 10; Van der Merwe et al., 2020). From an industry perspective, the role of the financial adviser entails gathering information from the client and providing financial advice in return. The information sharing process results in physical evidence, such as policy documents, which support the performance of the financial adviser (Gladka & Fedorova, 2019; Pakurár et al., 2019).

Taking this into consideration, the following hypotheses are proposed:

H5: There is a significant positive relationship between the internal marketing framework people element and the

perceived value that financial advisers receive from their employer.

H6: There is a significant positive relationship between the internal marketing framework processes element and the perceived value that financial advisers receive from their employer.

H7: There is a significant positive relationship between the internal marketing framework physical evidence element and the perceived value that financial advisers receive from their employer.

Additional internal marketing framework elements and financial advisers' perceived value

The discussion surrounding 'internal people' provides the rationale for incorporating 'internal personal relationships' into the definition of internal marketing (Nemteanu & Dabija, 2021). Internal people engaging in positive interactions within the employment exchange perceive those interactions as beneficial and of value (Grönroos, 2017; Solnet et al., 2019). Interacting with internal people positively contributes to the employees' feeling of belonging and, as a result, their satisfaction with the employment exchange (Men & Yue, 2019; Nowlin et al., 2018). Research indicates that interactions with colleagues facilitate employee socialisation, thereby increasing both value and satisfaction (Yi et al., 2023). Internal personal relationships hinge on trust and engagement among employees, shaped by internal promotions that foster a particular culture and shared values, including mentoring relationships (Men & Yue, 2019; Nemteanu & Dabija, 2021).

An increase in relational focus on the evolution of internal marketing (Nemteanu & Dabija, 2021) provides a basis for the inclusion of internal political power. Internal political power is a demonstration of the level of support an employee has from others within the employment exchange. Employers can utilise the internal political power element by including employees in decision-making (Yildiz & Kara, 2017). Employers can also exploit the internal political power of employees to influence other employees to behave in specific ways (Lin et al., 2019). Within the context of this study, internal political power represents the support an employee has within the employment exchange.

In consideration of the argument provided, the following hypotheses are proposed:

H8: There is a significant positive relationship between the internal marketing framework personal relationships element and the perceived value that financial advisers receive from their employer.

H9: There is a significant positive relationship between the internal marketing framework political power element and the perceived value that financial advisers receive from their employer.

Financial advisers' perceived value and their level of satisfaction

Employee perceived value is the sum of benefits acquired within the employment exchange less the costs incurred in their acquisition (Arasanmi & Krishna, 2019). A review of the existing literature has shown that internal marketing provides multiple need-satisfying benefits to employees (Qiu et al., 2022; Ullah & Ahmad, 2017). When employees receive value within the employment exchange, there is an increased tendency towards satisfaction (Yi et al., 2023). As the Social Exchange Theory asserts, a positively valued employer-employee relationship is likely to give rise to positive outcomes for the employer. When engaged in a positively valued relationship with the employer, the employee will be more satisfied and work harder in reciprocation for the benefits gained in the employment exchange (Li & Yu, 2017; Serrano Archimi et al., 2018). This study proposed the expansion of the definition of internal marketing to add more benefits and, thus, more value to the employment exchange. The intended consequence is high levels of employee satisfaction. Based on the argument provided, the following hypothesis is proposed:

H10: There is a significant positive relationship between the perceived value of the employment exchange and employee satisfaction among financial advisers in the South African long-term insurance industry.

Figure 1 illustrates the theoretical model proposed for this study.

Methodology

A positivistic philosophy was followed, employing a deductive approach and quantitative research strategy implementing a cross-sectional, descriptive research design. The methodology is appropriate for the analysis of the relationship between the proposed expanded definition of internal marketing, perceived value and employee satisfaction (De Meyer-Heydenrych & Struweg, 2021).

Sample and procedures

The study targeted financial advisers in South Africa employed for at least 12 months by licensed FSPs under the *Long-term Insurance Act*. The sampling involved three phases: In the first phase, in March 2022, non-probability judgement sampling identified 20 FSPs. The 20 FSPs chosen are the top in the industry, representing 88% of the total market, based on premium earnings, observed in reputable industry reports (KPMG, 2021). In the second phase, from April 2022 to December 2022, non-probability convenience sampling recruited financial advisers from the 20 FSPs who met the study's selection criteria. The research agency contacted managers from the 20 FSPs, via publicly available contact details, asking permission to survey the financial advisers under their management. Upon permission being granted, the questionnaire was shared with consenting respondents who met the screening criteria. The second phase resulted in 350 successfully completed questionnaires. A third phase of data collection was then initiated in January 2023, repeating the convenience sampling approach used in phase two, to augment response rates, culminating in a sample size of 410 financial advisers.

Measurement scales

A structured, self-administered questionnaire was used to collect data from the financial advisers. A cover letter detailed the study's aims and completion instructions. After pilot-testing with 30 financial advisers and making minor revisions, the questionnaire was finalised. Screening questions confirmed the participants' representativity of the sample population as financial advisers, working for one of the 20 FSPs for a minimum of 12 months. The questionnaire continued with demographic questions. The respondents were then asked to indicate their level of agreement or disagreement on questions about the constructs of the study (internal marketing framework elements, perceived value and employee satisfaction). The respondents answered using a five-point Likert scale, with 1 being strongly disagree and 5 strongly agree. The various internal marketing constructs contained question items adapted from proven data collection tools from previous studies (De Bruin, 2019; Nowlin et al., 2018). The next section measured the value perception of the responding financial advisers (Barkhuizen, 2005). The final section of the questionnaire measured their satisfaction with the employment exchange (Frye et al., 2020). An analysis of the theoretical foundation of the questionnaire is presented in Table 1.

Analytical strategy

The data gathered was entered into IBM SPSS AMOS 24.0 per item. The data were then coded, edited, cleaned and analysed. To characterise the respondents, the demographic responses were analysed using calculations for frequencies and descriptive statistics. In addition, the respondents'

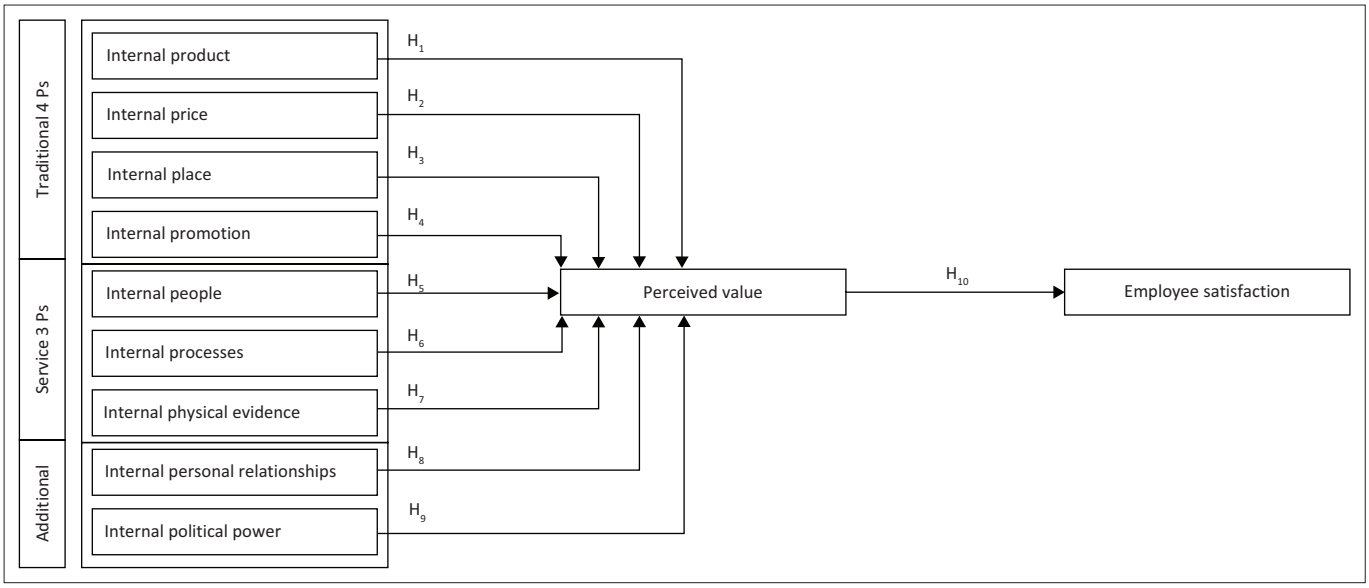

FIGURE 1: The proposed theoretical model.

TABLE 1: Questionnaire items and theoretical foundation.

Questionnaire item	Definition of construct per this study	Related hypothesis	Theoretical foundation
Internal product	The work that is performed and the tangible and intangible benefits that result from the work.	H1	De Bruin (2019) (Doctoral Study)
Internal price	The remuneration received in exchange for the work performed.	H2	De Bruin (2019) (Doctoral Study)
Internal place	The environment where tasks are performed.	H3	De Bruin (2019) (Doctoral Study)
Internal promotion	Internal communications aimed at employees.	H4	Reynolds-de Bruin (2014) (Master's Study)
Internal people	The human resources who interact in the job setting, including the employee, their peers, managers and/or superiors.	H5	Reynolds-de Bruin (2014) (Master's Study)
Internal processes	The workflows and processes that employees use to perform their tasks.	H6	De Bruin (2019) (Doctoral Study)
Internal physical evidence	The tangible cues presented where work has taken place.	H7	De Bruin (2019) (Doctoral Study)
Internal political power	The amount of influence or support an employee has in the employer organisation.	H8	De Bruin (2019) (Doctoral Study)
Internal personal relationships	The social interactions that take place in the workplace and a sense of belonging in the employer organisation.	H9	Nowlin et al. (2018) (Industrial Marketing Management)
Perceived value	An employee's assessment of what is received in the employment exchange (benefits received) versus what is given in return (costs incurred).	H10	Barkhuizen (2005) Job Characteristics Scale
Employee satisfaction	The overall assessment of the total employment experience.	H10	Frye et al. (2020) (International Journal of Hospitality Management)

Note: Please see the full reference list of this article, Storey, K., Lubbe, I., & Roberts-Lombard, M. (2025). Internal marketing, perceived value and satisfied employees in South African long-term insurance. *South African Journal of Business Management*, 56(1), a5433. https://doi.org/10.4102/sajbm.v56i1.a5433, for more information.

degree of agreement with the internal marketing framework elements at the FSP where they are employed, and their perceived value and employee satisfaction were determined through Structural Equation Modelling (SEM). Structural Equation Modelling is a powerful statistical method used for testing and estimating causal relationships using a combination of statistical data and qualitative causal assumptions. The SEM analysis validated the scale measures based on comparative fit, goodness-of-fit and root mean square error of approximation (RMSEA). This is achieved using Confirmatory Factor Analysis (CFA) to measure the factor structure between the variables under study. The results of the first phase of CFA were not satisfactory, as noted in the discussion on descriptive statistics. Those measurement variables deemed problematic were removed from the measurement model. This model fix led to the measurement model being improved by removing items. The second phase of CFA was then run, and the results revealed acceptable goodness-of-fit results. The second phase of CFA revealed an absolute index for normed chi square at 2.174 (less than 3 is acceptable [De Bruin, 2019]), a RMSEA at 0.054 (less than 0.070 is acceptable [De Bruin, 2019]), a goodness-of-fit index at 0.839 (between 0.80 and 0.90 is acceptable [De Bruin, 2019]), and a standardised root mean square at 0.0428 (less than 0.80 is acceptable [De Bruin, 2019]). The incremental indices were also acceptable at 0.937 and 0.925 (greater than 0.90 is acceptable [Malhotra, 2019]). Cronbach's alpha was applied as a measure of reliability, for the improved measurement model. The composite reliability (CR) ranged from 0.784 to 0.964, across all the constructs that falls above 0.70, which is acceptable (Malhotra, 2019). Thus, the construct reliability of the model is supported.

Ethical considerations

Ethical clearance to conduct this study was obtained from the University of Johannesburg, School of Consumer Intelligence and Information Systems Research Ethics Committee (2022SCiiS031). The fieldwork was performed by an independent research agency of good repute, guided by the requirements for ethical clearance by the researcher's educational institution.

Results

Sample demographic profile

The study profiled financial advisers, mainly aged 27–41 years (58.80%), with males being slightly more in number. Most participants had a diploma (30.50%) and had completed the industry Regulatory Exam (81.20%). The majority had a job tenure between 1 year and 5 years (33.40%) and worked onsite at offices provided by their FSPs (87.10%). All 20 FSPs were included in the study, with the top three most represented being Old Mutual Life Assurance (19.00%), Liberty Group (15.10%) and Absa Life (12.20%). These findings align with overall industry data as corroborated by the KPMG (2021) report. The complete demographic profile is presented in Table 2.

Descriptive statistics

The financial advisers who were surveyed resulted in an overall mean score of 4.38 for the construct of 'internal marketing', signifying its strategic use within the South African long-term insurance sector. This composite score was derived from eight elements of the internal marketing

TABLE 2: Demographic results.

Measure	Index	Frequency	%
Gender	Male	214	52.20
	Female	192	46.80
	Nonbinary	2	0.50
	Prefer not to state	2	0.50
Age (years old)	18–26	36	8.80
	27–41	241	58.80
	42–57	119	29.00
	> 58	14	3.40
	Prefer not to state	0	0.00
Level of education	Grade 12	76	18.50
	Higher certificate	32	7.80
	Diploma	125	30.50
	Degree	122	29.80
	Post-graduate qualification	31	7.60
	Prefer not to state	24	5.90
Completed regulatory exam	Yes	333	81.20
	No	59	14.40
	Prefer not to state	9	2.20
	No answer	9	2.20
Tenure (years)	1–5	137	33.40
	6–10	129	31.50
	11–15	82	20.00
	16–20	37	9.00
	More than 20	24	5.90
	Prefer not to state	1	0.20
Current employer (Financial Services Provider)	Sanlam	16	3.90
	Old Mutual Life Assurance	78	19.00
	Liberty Group	62	15.10
	Discovery Life	20	4.90
	Momentum Metropolitan Life	40	9.80
	Guardrisk Life	2	0.50
	Hollard Life Assurance	4	1.00
	Professional Provident Society	8	2.00
	AVBOB	41	10.00
	Absa Life	50	12.20
	Assupol	21	5.10
	Centriq Life Insurance	2	0.50
	Nedgroup Life Assurance	32	7.80
	Clientele Life Assurance	14	3.40
	1Life Insurance	1	0.20
	Old Mutual Alternative Risk	5	1.20
	Hollard Specialist Life	2	0.50
	Outsurance Life Insurance	1	0.20
	AIG Life South Africa	2	0.50
	Standard General Insurance	6	1.50
	Prefer not to state	3	0.70
Primary workplace	Onsite office	357	87.10
	Home-based office	47	11.50
	Prefer not to state	6	1.50
Average monthly gross income (ZAR)	0–20 000	72	17.60
	20 001–40 000	104	25.40
	40 001–60 000	97	23.70
	> 60 000	73	17.80
	Prefer not to state	64	15.60

ZAR, South African Rand.

framework. Notably, the constructs of internal product and internal price were amalgamated into a new construct termed 'internal product acknowledgement', following the first phase of CFA, which indicated that the original sub-constructs were essentially measuring the same underlying phenomena. This finding reveals that respondents did not view the concepts of internal product and internal price as being empirically distinct, but rather as the same latent dimension of perceived value. This finding agrees with previous studies where aspects of internal product and internal price have been grouped together (Gounaris, 2006; Yildiz & Kara, 2017).

Perceived value in the employment exchange garnered an overall mean score of 4.04. This indicates a generally positive perception of the employment exchange value. It was found that advisers felt most strongly that their skills and capabilities were adequately utilised (mean = 4.56; standard deviation [SD] = 0.745). Conversely, the least in agreement was financial rewards (mean = 3.77; SD = 1.340), suggesting a desire for increased remuneration or other forms of financial rewards. The findings agree with previous studies, where financial rewards are commonly perceived as not good enough by financial advisers (Redelinghuys, 2017).

Similarly, financial advisers indicated that they are not allocated sufficient time to meet work demands (mean = 3.76; SD = 1.334) and showed the least in agreement to be the notion that their current pay is commensurate with their workload (mean = 3.55; SD = 1.434). The results indicate that financial advisers desire improved financial compensation. Results demonstrate that most financial advisers generally agree with statements reflecting their perceived value in the employment exchange (mean = 4.04; SD = 0.829). This is consistent with the literature (Dabirian et al., 2019; Frone & Blais, 2019; Jung & Suh, 2019), where perceived value in employment is a function of both received benefits and incurred costs (Eggert et al., 2019; Ronda et al., 2018; Van Tonder et al., 2018; Vargo et al., 2017).

Finally, the study revealed an average satisfaction mean score of 4.00 within the employment exchange. The respondents generally reported feelings of satisfaction, happiness and accomplishment in their current roles. This aligns with the findings of Bangwal and Tiwari (2019) and Kimwolo and Cheruiyot (2019), who agree that employees who view their overall employment experience positively will be satisfied, contributing to the extant literature on job satisfaction within this profession. A breakdown of the descriptive results of research variables and respective questionnaire items is available in Table 3.

Measurement model assessment

AMOS 24.0 was used for CFA to ensure reliability and validity. The model, comprising 28 items and 11 constructs, underwent specification and subsequent refinement, aimed at enhancing the overall model-fit. As presented in Table 4, it is evident that initially most model-fit indices did not meet the required thresholds. The statistical analysis concluded that the results of the CFA were not satisfactory, necessitating a second phase to be conducted based on an improved measurement model. The second phase of CFA was conducted with the items for internal product and internal price combined to form the new item, internal product acknowledgement. Table 4 confirms that the overall model-fit was improved.

Reliability analysis, convergent and discriminant validity assessment

In Table 5, a comprehensive overview of the construct measurements can be found, which includes factor loadings, adjusted item-to-item correlations, means, and SD, evaluated at a 99% confidence level. The metrics bolster the dependability of the constructs in the revised measurement framework, as evidenced by CR scores ranging from 0.784 to 0.964 – exceeding the threshold of 0.70 across all constructs.

Referring to Table 4, the reliability of the constructs in the improved measurement model, attained Cronbach's alpha scores all above the accepted cut-off of 0.70, ranging between 0.770 and 0.910. Reviewing the CR, Table 4 provides evidence to support the reliability of the constructs used in the improved measurement model, as the range for CR across all the constructs is above 0.70, ranging between 0.784 and 0.911. The average variance extracted (AVE) was calculated as a complementary measure, with all the construct scores exceeding the 0.50 limit. The AVE measures how much of the variation is related to the construct; thus, this finding reveals that in all cases over 50% of the variations, in the items, in each construct can be explained by corresponding items. Error measures in the measurement items are all below 50%.

Discriminant validity was assessed by comparing the maximum shared variances (MSVs) with their respective AVE values for all constructs. As can be seen from Table 5, it is evident that the MSV values are consistently lower than the corresponding AVE values, indicating adequate discriminant validity across the majority of the constructs. However, an exception was found in the case of internal promotion, where the MSV value exceeded the AVE.

Further insight into the discriminant validity between internal promotion and internal people and the other constructs in the model was gained from the correlation between the pairs of constructs, and subsequently, a re-estimation of the model was conducted. To determine whether a construct is unique, the χ^2 difference between the unconstrained and constrained models for each pair of constructs should be greater than 3.84. The χ^2 difference for each pair of constructs, including internal promotion and internal people, was greater than 3.84. Therefore, it can confidently be asserted that the internal promotion construct demonstrates uniqueness within the model.

Structural model assessment

The SEM was performed to test the 10 hypotheses of the study (refer to Table 6), examining the relationships between

TABLE 3: Descriptive results of research variables and respective questionnaire items.

Research variables and respective questionnaire items	*N*	Mean ($\bar{x}$)	Standard deviation
Internal marketing	-	4.38	-
Internal product acknowledgement	-	4.58	0.58
I understand my job requirements to do my job well in my organisation.	410	4.83	0.55
I am provided with training and development opportunities at my organisation.	410	4.73	0.66
Internal place	-	4.57	0.72
I am provided with a workspace that is conducive to work in by my organisation.	410	4.65	0.77
I am provided with a workspace that encourages the sharing of information.	410	4.47	0.99
I am provided with a working space where I feel safe in my organisation.	410	4.60	0.79
Internal promotion	-	4.43	0.85
I am provided with frequent communication on important topics by leadership.	410	4.58	0.87
I am satisfied with the media used to communicate with me.	410	4.45	0.98
I am satisfied with internal events. such as roadshows and conferences used to communicate with me.	410	4.25	1.20
Internal people	-	4.44	0.74
I am satisfied that the leaders of my organisation communicate the vision of the organisation to me.	410	4.46	0.92
I am satisfied that leaders of my organisation consider the suggestions of employees while making decisions.	410	4.29	1.07
Internal processes	-	4.31	0.71
I am provided with internal processes that help me to do my work at my organisation.	410	4.63	0.74
I am satisfied that the internal processes between departments enable me to do my work at my organisation.	410	4.48	0.84
Internal physical evidence	-	4.50	0.72
I find the layout of the workspace of my organisation to be functional.	410	4.57	0.84
I find the atmosphere of my organisation to be appealing.	410	4.51	0.85
I find the physical workspace at my organisation enables positive social interactions.	410	4.49	0.88
Internal political power		3.99	1.00
I have an easier work life due to the influence I have over other employees in my organisation.	410	3.88	1.17
I have influence over other employees in my organisation which is to my advantage.	410	3.96	1.12
I am more productive due to the connections I have with other employees in my organisation.	410	4.00	1.11
I am provided with opportunities to progress in my career due to the influence I have over other employees in my organisation.	410	4.10	1.09
Internal personal relationships	-	4.36	0.77
I have colleagues I can turn to in my organisation whom I trust.	410	4.39	0.93
I have colleagues I can engage with in my organisation.	410	4.54	0.80
I have colleagues available who can assist me when I experience challenges in my work at my organisation.	410	4.51	0.80
Perceived value	-	4.04	0.83
I have the possibility to progress financially while working at my organisation.	410	4.20	1.01
I feel that I have enough contact with my colleagues while working at my organisation.	410	4.40	0.86
I have work that places sufficient demands on my skills and capabilities.	410	4.56	0.75
I am not paid enough for the work that I do at my organisation.	410	3.55	1.43
Employee satisfaction	-	4.00	1.03
I am satisfied with my current job.	410	4.25	1.12
I am happy with my current job.	410	4.24	1.12

TABLE 4: Confirmatory factor analysis results for improved measurement model.

Goodness-of-fit measures	Index	First phase	Second phase (accepted)	Acceptance
Absolute index	Normed Chi-square	3.61	2.17	x^2/df ≤ 3 acceptable 3–5 acceptable
	Goodness-of-fit Index (GFI)	0.60	0.84	GFI > 0.90 good 0.80–0.90 acceptable
	Root mean square error of approximation (RMSEA)	0.08	0.05	RMSEA < 0.05 good 0.06–1 acceptable
	Standardised root mean square residual	0.09	0.043	SRMR < 0.08 acceptable < 0.05 good = 0 perfect
Incremental index	Comparative fit index (CFI)	0.76	0.94	CFI > 0.90 good
	Tucker-Lewis index (TLI)	0.74	0.94	TLI > 0.90 > 0.90 good 0.80–0.90 acceptable

df, degrees of freedom.

observed and latent variables in a comprehensive, statistically rigorous manner. The interrelationships between the elements of the internal marketing framework, perceived value and employee satisfaction were measured using the proposed model as presented in Figure 1. The path estimate values (represented by single-headed arrows) on the structural model, were tested using the maximum likelihood performed with AMOS 24.0. Before testing the hypotheses, the improved structural model was tested and deemed to be a satisfactory fit.

Assessment of the goodness-of-fit, standardised root mean square residual and coefficient of determination

The employee perceived value coefficient of determination (R^2 = 0.36) indicates that the items of the internal marketing framework construct of the structural model explain 36% of the variance in the perceived value construct. The employee satisfaction construct (R^2 = 0.24) explains up to 24% of the variance of the employee satisfaction construct. Thus, it was possible to calculate the overall goodness-of-fit, using the average of all AVEs for the structural model and the average R^2 to be 0.858. This exceeds the acceptable level of 0.36. It can be confirmed that the structural model has a good overall fit.

TABLE 5: A summary of factor loading, corrected item-correlations, means and standard deviations, Cronbach's alpha score and average variance extracted.

Constructs	Items	Factor loading	*p*-value	Cronbach's alpha	CR	AVE
Internal product acknowledgement	IPD1	0.78	0.01	0.78	0.78	0.64
	IPD3	0.82				
Internal place	IPL1	0.77	0.01	0.79	0.81	0.58
	IPL2	0.71				
	IPL3	0.81				
Internal promotion	IPM1	0.75	0.01	0.77	0.79	0.55
	IPM2	0.78				
	IPM3	0.70				
Internal people	IPP1	0.88	0.01	0.86	0.87	0.76
	IPP2	0.87				
Internal processes	IPC1	0.85	0.01	0.81	0.81	0.68
	IPC2	0.80				
Internal physical evidence	IPE1	0.80	0.01	0.87	0.87	0.69
	IPE2	0.89				
	IPE3	0.80				
Internal political power	IPW1	0.88	0.01	0.91	0.91	0.72
	IPW2	0.90				
	IPW3	0.84				
	IPW4	0.77				
Internal personal relationships	IPS1	0.82	0.01	0.88	0.89	0.72
	IPS2	0.87				
	IPS3	0.86				
Perceived value	FPB4	0.84	0.01	0.88	0.88	0.66
	FPB5	0.93				
	FPB6	0.83				
	PHPC1	0.60				
Employee satisfaction	ES1	0.87	0.01	0.91	0.91	0.83
	ES2	0.96				

CR, composite reliability; AVE, average variance extracted.

While these values indicate that internal marketing explains a moderate proportion of the variance in perceived value and satisfaction, additional factors outside the scope of this study likely also contribute.

The standardised root mean residual (SRMR) was calculated as 0.08. The acceptable level is 0.08 or below, thus the structural model does meet the acceptable level, confirming a good fit. With the employee perceived value coefficient of determination calculated at 0.36 and the employee satisfaction construct at 0.24, both fall within the acceptable range of between 0 and 1. The assessment confirms that the exogenic constructs explain the behaviour of the endogenic constructs of the structural model.

This conclusion is drawn based on the improved structural model indices: $\chi^2 = 1607.124$; *p*-value = 0.000; *df* = 669; CMIN/*df* = 2.402; goodness-of-fit index (GFI) = 0.835; Tucker-Lewis index (TLI) = 0.912; SRMR = 0.0841; RMSEA = 0.059. Thus, there is a satisfactory fit between the improved structural model and the research data. The hypotheses results are presented in Table 6, and a discussion of the outcome follows in the discussion next:

TABLE 6: Results of hypothesis testing.

Hypothesis	Independent variable	Dependent variable	β	Sig.	Finding
H1	Internal product acknowledgement	Perceived value	-0.03	0.77	Rejected
H2	Internal place	Perceived value	0.03	0.79	Rejected
H3	Internal promotion	Perceived value	0.03	0.82	Rejected
H4	Internal people	Perceived value	0.34	0.01	Accepted
H5	Internal processes	Perceived value	-0.08	0.44	Rejected
H6	Internal physical evidence	Perceived value	0.04	0.68	Rejected
H7	Internal personal relationships	Perceived value	-0.07	0.38	Rejected
H8	Internal political power	Perceived value	0.15	0.03	Accepted
H9	Perceived value	Employee satisfaction	0.49	0.00	Accepted

Sig., significant.

Conclusion

This study aimed to examine the relationship between internal marketing, employees' perceived value in the employment context and employee satisfaction, with a focus on South African long-term insurance industry financial advisers. The results indicated that financial advisers perceive value when the internal marketing framework incorporates internal people and internal political power elements. The effective implementation of an expanded internal marketing framework has a positive influence on financial advisers' perceived value and subsequently leads to increased satisfaction. This information can help FSPs enhance financial advisers' perceived value, reduce turnover and improve satisfaction within the industry. In summary, it is recommended that the South African long-term insurance industry implements well-managed internal marketing programmes to combat adviser-retention challenges. It is suggested that FSPs leverage internal people and internal political power in particular. The FSPs should still strategically manage the perception of internal product acknowledgement, internal place, internal processes, internal physical evidence and internal personal relationships, to prevent any reduction in perceived value. Through the implementation of internal marketing, as a relationship management tool, financial advisers who value their employment exchange are likely to be more satisfied.

With the focus of this study being solely on financial advisers and not other employees within the South African long-term insurance industry, the results cannot be generalised to the broader industry or beyond the South African context. By isolating the study to only include financial advisers, the findings have a bias towards the opinions of financial advisers and what is in their best interest. Two of the variables (internal promotion and internal people) raised discriminant validity concerns, which should be addressed in further studies. The study did not consider conducting cumulative results analysis to check the significance of a single variable for all independent variables of internal marketing on perceived value. Future research should then address these shortcomings by broadening the focus of this study to include other employees in the industry, compare results in other countries and further refine the measurement model.

Acknowledgements

This article includes content that overlaps with research originally conducted as part of Kathleen Storey's Doctoral

thesis entitled, 'The role of internal marketing on independent financial adviser turnover intention', submitted to the College of Business & Economics at the University of Johannesburg in 2023. The thesis was supervised by Mornay Roberts-Lombard and Isolde Lubbe. Portions of the data, analysis, and discussion have been revised, updated and adapted for publication as a journal article. The original thesis is publicly available at: https://www.proquest.com/docview/3224564309. The author affirms that this article complies with ethical standards for secondary publication, and appropriate acknowledgement has been made of the original work.

Competing interests

The author, Kathleen Storey, of this publication received research funding from the University of Johannesburg's Department of Marketing Management in the form of a doctoral degree bursary, which is developing products related to the research described in this publication. In addition, the authors serve as consultants to the entity and received compensation for these services. The terms of this arrangement have been reviewed and approved by the University of Johannesburg in accordance with its policy on objectivity in research.

CRediT authorship contribution

Kathleen Storey: Conceptualisation, Data curation, Formal analysis, Investigation, Methodology, Resources, Visualisation, Writing-original draft, Writing-review & editing. Isolde Lubbe: Conceptualisation, Data curation, Formal analysis, Investigation, Methodology, Project administration, Resources, Supervision, Visualisation, Writing-original draft, Writing-review & editing. Mornay Roberts-Lombard: Conceptualisation, Data curation, Formal analysis, Investigation, Methodology, Project administration, Resources, Supervision, Visualisation, Writing-original draft, Writing-review & editing. All authors reviewed the article, contributed to the discussion of results, approved the final version for submission and publication and take responsibility for the integrity of its findings.

Funding information

This work was supported by the University of Johannesburg's Department of Marketing Management in the form of a doctoral degree bursary awarded to the corresponding author, Kathleen Storey.

Data availability

The data that support the findings of this study are available from the corresponding author, Kathleen Storey, upon reasonable request.

Disclaimer

The views and opinions expressed in this article are those of the authors and are the product of professional research. They do not necessarily reflect the official policy or position of any affiliated institution, funder, agency or that of the publisher. The authors are responsible for this article's results, findings and content.

References

Arasanmi, C.N., & Krishna, A. (2019). Linking the employee value proposition (EVP) to employee behavioural outcomes. *Industrial and Commercial Training, 51*(7), 387–395. https://doi.org/10.1108/ICT-05-2019-0043

Bangwal, D., & Tiwari, P. (2019). Workplace environment, employee satisfaction and intent to stay. *International Journal of Contemporary Hospitality Management, 31*(1), 268–284. https://doi.org/10.1108/IJCHM-04-2017-0230

Barkhuizen, E.N. (2005). Work wellness of academic staff in South African higher education institutions. Doctoral dissertation, North-West University.

Berthelsen, H., Westerlund, H., Pejtersen, J.H., & Hadzibajramovic, E. (2019). Construct validity of a global scale for workplace social capital based on COPSOQ III. *PLoS One, 14*(8), 1–17. https://doi.org/10.1371/journal.pone.0221893

Bolisani, E., Scarso, E., Ipsen, C., Kirchner, K., & Hansen, J.P. (2020). Working from home during COVID-19 pandemic: Lessons learned and issues. *Management & Marketing, 15*(1), 458–476. https://doi.org/10.2478/mmcks-2020-0027

Bunner, J., Roman, P., & Korunka, C. (2019). How do safety engineers improve their job performance? The roles of influence tactics, expert power, and management support. *Employee Relations,* 42(2), 381–397. https://doi.org/10.1108/ER-04-2018-0120

Bussin, M., & Mouton, H. (2019). Effectiveness of employer branding on staff retention and compensation expectations. *South African Journal of Economic and Management Sciences, 22*(1), a2412. https://doi.org/10.4102/sajems.v22i1.2412

Chaolertseree, S., & Taephant, N. (2020). Outcomes of meaningful work with a focus on Asia: A systematic review. *Journal of Behavioral Science, 15*(3), 101–116.

Dabirian, A., Berthon, P., & Kietzmann, J. (2019). Enticing the IT crowd: Employer branding in the information economy. *Journal of Business & Industrial Marketing, 34*(7), 1403–1409. https://doi.org/10.1108/JBIM-11-2018-0333

Dadwal, S.S. (Ed). (2019). Handbook of research on innovations in technology and marketing for the connected consumer. IGI Global.

De Bruin, L. (2019). *Internal marketing and the delivery of service quality and customer satisfaction in the Oman Banking Industry*. Doctoral thesis, University of Johannesburg. Retrieved from https://ujcontent.uj.ac.za/vital/access/services/Download/uj:33727/SOURCE1?view=true

De Bruin, L., Roberts-Lombard, M., & De Meyer-Heydenrych, C. (2021). Internal marketing, service quality and perceived customer satisfaction: An Islamic banking perspective. *Journal of Islamic Marketing, 12*(1), 199–224. https://doi.org/10.1108/JIMA-09-2019-0185

De Meyer-Heydenrych, C.F., & Struweg, I. (2021). The influence of transaction cost variables on e-buyer satisfaction and loyalty: An e-business-to-consumer retailer context. *Journal of Economic and Financial Sciences, 14*(1), a565. https://doi.org/10.4102/jef.v14i1.565

Eckert, C., & Osterrieder, K. (2020). How digitalization affects insurance companies: Overview and use cases of digital technologies. *Zeitschrift für die gesamte Versicherungswissenschaft, 109*, 333–360. https://doi.org/10.1007/s12297-020-00475-9

Egan, M., Gregor M., & Amit S. (2022). When Harry fired Sally: The double standard in punishing misconduct. *Journal of Political Economy, 130*(5), 1184–124. https://doi.org/10.1086/718964

Eggert, A., Kleinaltenkamp, M., & Kashyap, V. (2019). Mapping value in business markets: An integrative framework. *Industrial Marketing Management, 79*(1), 13–20. https://doi.org/10.1016/j.indmarman.2019.03.004

Filstad, C., Traavik, L.E.M., & Gorli, M. (2019). Belonging at work: The experiences, representations and meanings of belonging. *Journal of Workplace Learning, 31*(2), 116–142. https://doi.org/10.1108/JWL-06-2018-0081

Frone, M.R., & Blais, A. (2019). Work fatigue in a non-deployed military setting: Assessment, prevalence, predictors, and outcomes. *International Journal of Environmental Research and Public Health, 16*(16), 2892. https://doi.org/10.3390/ijerph16162892

Frye, W.D., Kang, S., Huh, C., & Lee, M.J. (2020). What factors influence Generation Y's employee retention in the hospitality industry?: An internal marketing approach. *International Journal of Hospitality Management, 85*(1), 102352–102360. https://doi.org/10.1016/j.ijhm.2019.102352

Gladka, O., & Fedorova, V. (2019). Defining personnel marketing strategies. *Journal of Business: Theory and Practice, 20*, 146–157. https://doi.org/10.3846/btp.2019.14

Gounaris, S.P. (2006). Internal-market orientation and its measurement. *Journal of Business Research, 59*(4), 432–448. https://doi.org/10.1016/j.jbusres.2005.10.003

Grönroos, C. (2017). Relationship marketing readiness: Theoretical background and measurement directions. *Journal of Services Marketing, 31*(3), 218–225. https://doi.org/10.1108/JSM-02-2017-0056

Grönroos, C. (2020). Viewpoint: Service marketing research priorities: Service and marketing. *Journal of Services Marketing, 34*(3), 291–298. https://doi.org/10.1108/JSM-08-2019-0306

Gwinji, W.A, Chiliya, N., Chuchu, T., & Ndoro, T. (2020). An application of internal marketing for sustainable competitive advantage in Johannesburg construction firms. *African Journal of Business and Economic Research, 15*(1), 183–200. https://doi.org/10.31920/1750-4562/2020/15n1a8

Jung, Y., & Suh, Y. (2019). Mining the voice of employees: A text mining approach to identifying and analyzing job satisfaction factors from online employee reviews. *Decision Support Systems, 123*(1), 113074. https://doi.org/10.1016/j.dss.2019.113074

Kimwolo, A., & Cheruiyot, T. (2019). Intrinsically motivating idiosyncratic deals and innovative work behaviour. *International Journal of Innovation Science, 11*(1), 31–47. https://doi.org/10.1108/IJIS-05-2017-0038

KPMG. (2021). *KPMG insurance survey 2021*. Retrieved from https://assets.kpmg.com/content/dam/kpmg/za/pdf/2021/the-south-african-insurance-survey-presentation-2021.pdf

Ladzani, P., & Roberts-Lombard, M. (2019). Strengthening bank employee job satisfaction through an 'internal people' approach – An emerging market perspective. *Retail and Marketing Review, 15*(1), 1–12.

Li, H.Y., & Yu, G.L. (2017). A multilevel examination of high-performance work systems and organizational citizenship behavior: A social exchange theory perspective. *Eurasia Journal of Mathematics, Science and Technology Education, 13*(8), 5821–5835. https://doi.org/10.12973/eurasia.2017.01032a

Lin, X., Chen, Z.X., Tse, H.H., Wei, W., & Ma, C. (2019). Why and when employees like to speak up more under humble leaders? The roles of personal sense of power and power distance. *Journal of Business Ethics, 158*, 937–950. https://doi.org/10.1007/s10551-017-3704-2

Malhotra, N.K. (2019). *Marketing research: An applied orientation* (7th ed.). Pearson Education, Inc.

Men, L.R., & Yue, C.A. (2019). Creating a positive emotional culture: Effect of internal communication and impact on employee supportive behaviors. *Public Relations Review, 45*(3), 101764. https://doi.org/10.1016/j.pubrev.2019.03.001

Mura, L., Gontkovicova, B., Dulova Spisakova, E., & Hajduova, Z. (2019). Position of employee benefits in remuneration structure. *Transformations in Business & Economics, 18*(47), 156–173.

Nemteanu, M-S., & Dabija, D-C. (2021). The influence of internal marketing and job satisfaction on task performance and counterproductive work behavior in an emerging market during the COVID-19 pandemic. *International Journal of Environmental Research and Public Health,* 18, 3670. https://doi.org/10.3390/ijerph18073670

Nowlin, E., Walker, D., & Anaza, N.A. (2018). How does salesperson connectedness impact performance? It depends upon the level of internal volatility. *Industrial Marketing Management, 68*, 106–113. https://doi.org/10.1016/j.indmarman.2017.10.007

Pakurár, M., Haddad, H., Nagy, J., Popp, J., & Oláh, J. (2019). The service quality dimensions that affect customer satisfaction in the Jordanian banking sector. *Sustainability, 11*(4), 1113. https://doi.org/10.3390/su11041113

PricewaterhouseCoopers (PwC). (2023). *South Africa economic outlook*. Retrieved from https://www.fanews.co.za/assets/Marilyn%202023_1/PwC25072023.pdf

Qiu, J., Boukis, A., & Storey, C. (2022). Internal marketing: A systematic review. *Journal of Marketing Theory and Practice, 30*(1), 53–67. https://doi.org/10.1080/10696679.2021.1886588

Raj, A.B. (2021). Internal branding, employees' brand commitment and moderation role of transformational leadership: An empirical study in Indian telecommunication context. *Asia-Pacific Journal of Business Administration, 14*(3), 285–308. https://doi.org/10.1108/APJBA-04-2021-0175

Rautenbach, T. (2020). *Investigating the influence of thinking styles on the sales performance of South African financial advisors*. Master's dissertation, North-West University. Retrieved from http://repository.nwu.ac.za/bitstream/handle/10394/34870/Rautenbach%20T%2027020746.pdf?sequence=1&isAllowed=y

Redelinghuys, M. (2017). *The effect of compensation structures on the well-being of financial advisors*. Master's dissertation, University of Pretoria. Retrieved from https://repository.up.ac.za/bitstream/handle/2263/60518/Redelinghuys_Effect_2017.pdf?sequence=1&isAllowed=y

Reynolds-de Bruin, L. (2014). *The influence of internal marketing on internal customers within retail banking*. Master's thesis, University of Johannesburg. Retrieved from https://ujcontent.uj.ac.za/vital/access/manager/Repository/uj:11550?queryType=vitalDismax&query=The+influence+of+internal+marketing+on+internal+customers+within+retail+banking

Ronda, L., Valor, C., & Abril, C. (2018). Are they willing to work for you? An employee-centric view to employer brand attractiveness. *Journal of Product and Brand Management, 27*(5), 573–596. https://doi.org/10.1108/JPBM-07-2017-1522

Saurombie, M.D., Rayners, S.S., Mokgobu, K.A., & Manka, K. (2022). The perceived influence of remote working on specific human resource management outcomes during the COVID-19 pandemic. *SA Journal of Human Resource Management, 20*, a2033. https://doi.org/10.4102/sajhrm.v20i0.2033

Serrano Archimi, C., Reynaud, E., Yasin, H.M., & Bhatti, Z.A. (2018). How perceived corporate social responsibility affects employee cynicism: The mediating role of organizational trust. *Journal of Business Ethics, 151*(1), 907–921. https://doi.org/10.1007/s10551-018-3882-6

Solnet, D., Subramony, M., Ford, R.C., Golubovskaya, M., Kang, H.J., & Hancer, M. (2019). Leveraging human touch in service interactions: Lessons from hospitality. *Journal of Service Management, 30*(3), 392–409. https://doi.org/10.1108/JOSM-12-2018-0380

Ullah, M., & Ahmad, H.M. (2017). The impact of internal marketing on the organizational performance through organizational culture mediation. *Abasyn Journal of Social Sciences, 10*(1), 129–148.

Van der Merwe, B., Malan, J., & Bruwer, R. (2020). Intention to quit in the financial services industry: Antecedents and managerial implications. *South African Journal of Economic and Management Sciences, 23*(1), a3710. https://doi.org/10.4102/sajems.v23i1.3710

Van Tonder, E., & Petzer, D.J. (2018). The interrelationships between relationship marketing constructs and customer engagement dimensions. *Service Industries Journal, 38*(13–14), 948–973. https://doi.org/10.1080/02642069.2018.1425398

Van Tonder, E., Petzer, D.J., Van Vuuren, N., & De Beer, L.T. (2018). Perceived value, relationship quality and positive WOM intention in banking. *International Journal of Bank Marketing, 36*(7), 1347–1366. https://doi.org/10.1108/IJBM-08-2017-0171

Vargo, S.L., Akaka, M.A., & Vaughan, C.M. (2017). Conceptualizing value: A service-ecosystem view. *Journal of Creating Value, 3*(2), 117–124. https://doi.org/10.1177/2394964317732861

Yi, H-Y., Cho, Y., & Amenuvor, F.E. (2023). Internal marketing and salespeople's out-of-role behaviour: The mediating role of job satisfaction. *European Research on Management and Business Economics, 29*(2), 100216. https://doi.org/10.1016/j.iedeen.2023.100216

Yildiz, S.M., & Kara, A. (2017). A unidimensional instrument for measuring internal marketing concept in the higher education sector. *Quality Assurance in Education, 25*(3), 343–361.