An indirectly controlled high-speed servo valve for IC engines using piezo actuators

L Behre[a], U Becker [b], T van Niekerk [c], H Harndorf [d], P Mercorelli [e], N Werner[f]*

Received 6 January 2015, in revised form 25 April 2015 and accepted 18 June 2015

Abstract *Since the exhaust emissions legislation for motor vehicles with combustion engines is complicating the manufacturing of environmental yet powerful engines more than ever, automobile manufacturers have approached this challenge by means of downsizing, hybridization of combustion and electric engines and variable valve opening times. In these cases conventional, mechanical valve trains are still used. The subject of this research is the development of a mechatronic control unit as replacement for the camshaft driven valve train of common combustion engines. The system's aim is a contribution to the progression of the development of modern combustion engines satisfying current demands in terms of economy and efficiency. The developed system is based on the "Full Variable Valve Train"project, founded at the "Institute of Vehicle Construction Wolfsburg"at the "Ostfalia University of Applied Sciences". An indirectly controlled high speed servo valve that is actuated by a piezo-electric actuator and pressurized hydraulic fluid is being developed. The overall aim is to obtain advantages from a control engineering perspective, being able to reduce the size of the used piezo actuator and hence solve the packaging and regulation issues of the overall system. After manufacturing and improvement activities, a system could be developed that allows a variable control of the engine valve movement. The best results are achieved using a rectangular function for the engine valve actuator. The system allows engine valve operation independent from the crankshaft position and shows the potential to generate higher engine torque and power output while decreasing fuel consumption and emissions at the same time.*

Additional keywords: Piezo controlled valve, Full variable valve train, Combustion engine

1 Introduction

The customers' expectations in terms of vehicle safety and comfort aspects are further increasing. At the same time a modern motor vehicle is expected to have a powertrain strong enough to meet the demands of effortless driving comfort even though motor vehicle weights as a general rule advance gradually as a consequence of the afore-mentioned customers' expectations. On the other hand the customer's choice for a certain vehicle is determined by a low fuel consumption, being the key buying criterion in general.

The emissions legislation continues to become more and more sharp worldwide. In Europe the "Euro 6" standard limits the emissions of carbon monoxide (CO), nitrogen oxides (NO_x), hydrocarbon (HC), and particulate matter (PM). With the "Tier 2" limits in the United States of America (USA) and the emission regulations defined by the "Ministry of the Environment" (MOE) in Japan, mentioning only the most important, similar regulations apply throughout the world. Additionally the carbon dioxide (CO_2) emissions are strictly limited. These are directly proportional to the fuel consumption of a vehicle. Accordingly, the automotive industry faces the challenge that with increasing vehicle weights very efficient engines need to be developed which deliver a high power and torque output while at the same time offering low fuel consumption and emissions.

The operation of the intake and exhaust valves of a four stroke combustion engine offers the largest potential concerning a positive influence on emissions and torque and power output, hence on the efficiency of an engine. Since the 1990s several systems have been developed in order to vary the actuation of the engine valves with the engine speed range. Examples for current systems are Honda's "Variable Valve Timing and Lift Electronic Control" (VTEC) system or "VarioCam" by Porsche. Looking at a valve lift curve the parameters that are influenced by the camshaft profile are the:

- Phasing
- Valve lift
- Valve opening time
- Valve lift function.

Most of the variable valve systems on the market are able to influence only valve lift and timing depending on engine speed. The systems are still a compromise between increased engine performance and low emissions. The beneficial effects are limited to a specific engine speed range of a few hundred revolutions, usually above 4000 rpm.

These variable valve systems are technically mature to the highest extent. Another attempt to develop very efficient combustion engines is the so-called downsizing. The displacement is being reduced while keeping the engine performance in reference to power and torque output. These engines are usually being turbocharged. Downsized engines can be combined with variable valve systems but still the cam profiles will be conventional and the complete potential of the valve train cannot be used.

[a] Department of Mechatronics, Nelson Mandela Metropolitan University, Port Elizabeth, South Africa, Leander.Behre@web.de.
[b] Department of Automotive Engineering, Ostfalia - UAS, Wolfsburg, Germany
[c] Department of Mechatronics, Nelson Mandela Metropolitan University, Port Elizabeth, South Africa, Theo.vanNiekerk@nmmu.ac.za
[d] Faculty of Mechanical Engineering and Marine Technology, University of Rostock, Rostock, Germany
[e] Institute of Product and Process Innovation, Leuphana University of Lueneburg, Lueneburg, Germany
[f] Department of Automotive Engineering, Ostfalia - UAS, Wolfsburg, Germany

http://www.saimeche.org.za (open access) © SAIMechE All rights reserved.

Electromobility as an alternative solution to the utilization of the combustion engine still features problems regarding high vehicle prices, a limited obtainable range of around 200 km only and high overall vehicle weights. Moreover, the environmental balance might not yet be as promising as suggested by the manufacturers of electric vehicles. Futher disadvantages are the fact that low ambient temperatures reduce the performance of the batteries and that a quick charging procedure of the batteries increases the amount of required energy by around ten per cent.[1] All these factors lead to an uncertain market penetration of electromobility at this state of development.

This research deals with a different approach to reveal the whole potential of the valve train. Based on the "Full Variable Valve Train" (FVVT) project founded at the Ostfalia University, an indirectly controlled fully adjustable mechatronic valve train control unit for a combustion engine as replacement for the mechanically driven valve trains used until the present time is developed. The FVVT is working electrohydraulically and without camshafts. It is not bound to a fixed cam timing and even inclination of the valve lift curve, the phasing and the valve lift function can be fully adjusted. The system also aims at dethrottling of the combustion engine, where the use of a throttle and hence pumping losses can be eliminated, while the task of the throttle is transferred to the engine intake valve motion, directly determining how much air enters the combustion chamber.

2 Miller- and Atkinson-cycle

The valve actuation timing exhibits large potential when it comes to an influence on the emissions of an internal combustion engine. CO_2, as one of the two critical exhaust emission components mentioned above, arises from a complete combustion of hydrocarbon in the fuel molecules.[2] This is why the concentration of CO_2 is very close to its maximum of around 17 vol% for the stoichiometric mixture ($\lambda = 1$). The formation of NO_x on the other hand is highly pressure and temperature dependent and reaches its maximum amount at a temperature between 2200 and 2400 K.

As the intake valve closing time has got the most significant influence on the above-mentioned emissions, this will be more closely analysed. Two pioneering strategies are the so-called Miller-cycle* and Atkinson-cycle†. The cycles are displayed in figures 1 and 2.

The graphs show the cylinder pressure versus cylinder volume, typically referred to as pV graph. Both cycles are displayed as Seiliger-cycle. This cycle combines the constant volume (isochoric) cycle according to Otto and the constant pressure (isobaric) cycle as seen in the Diesel-cycle‡ and reflects the cycle of the ideal engine.

Cycle direction is clockwise in both cases and underneath the actual cycle the charge cycle loop is included (6-7-8-1′). State changes 1-2 represent the compression stroke and 3-5 the power stroke respectively. BDC and TDC positions have been added to the cycles for better understanding. Isochoric

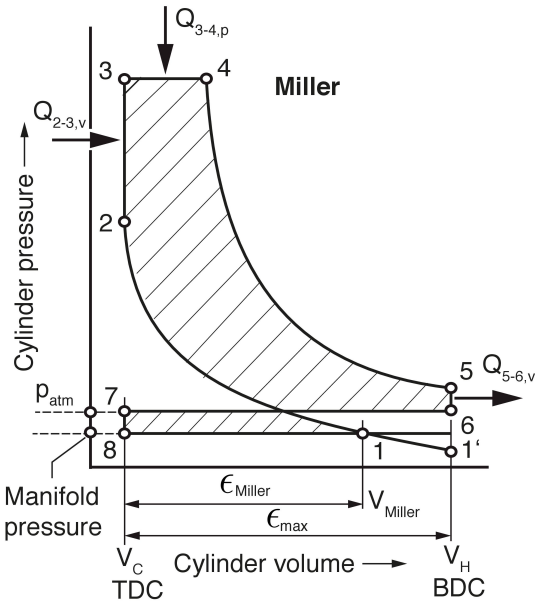

Figure 1 Miller Cycle

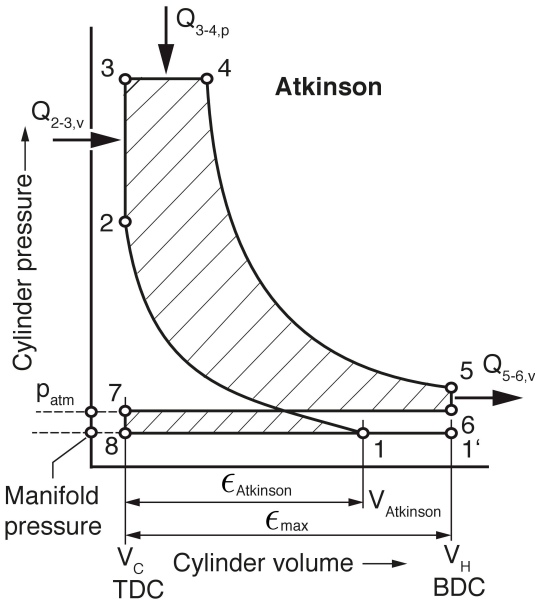

Figure 2 Atkinson Cycle

and isobaric heat supply $Q_{2-3,v}$ and $Q_{3-4,p}$, as well as removed heat $Q_{5-6,v}$, are also entered into the cycles. The manifold pressure course can also be taken from the diagram. Both Atkinson- and Miller-cycles are closely related and have the common aim of decreasing the heat produced in the combustion chamber by reducing the effective compression ratio compared to a usual cycle.[3]

The compression ratio ε is defined as the sum of cubic capacity and compression volume§ divided by the latter. This heat reduction leads to reduced NO_x emissions due to their temperature dependent behaviour. Both cycles do not utilize the available cubic capacity entirely and in figures 1 and 2

*named after its inventor and American engineer Ralph Miller who patented this principle 1957

†named after the British engineer James Atkinson, 1846-1914, who invented the Atkinson cycle engine in 1882

‡named after Rudolf Diesel, 1858-1913, German engineer and inventor of the diesel engine

§remaining volume between the piston top and cylinder head when piston is in TDC at the end of the compression stroke

http://www.saimeche.org.za (open access) © SAIMechE All rights reserved.

on the abscissa the reduced compression ratios $\varepsilon_{Atkinson}$ and ε_{Miller} are compared to the theoretical maximum ε_{max}.

The maximum air charge can be brought into the cylinder by closing the intake valve(s) in BDC. The compression ratio then reaches its maximum. If the intake valve closing time is altered, regardless of before or after BDC, less air enters the engine in general and hence the compression ratio is reduced. The decisive factor in this case is the cubic capacity used at the moment when the intake valve(s) close(s).

In the case of the Atkinson-cycle, also referred to as late intake valve closing (LIVC), a part of the air charge gets pushed out of the cylinder again while the piston moves from BDC to TDC with intake valve(s) still open at the beginning of the compression stroke. As seen in figure 2 the piston fulfils a full intake stroke (8-1′) at constant manifold pressure with open intake valve(s). While the cycle continues (1′-1) the manifold pressure does not change as intake valve closing and thus the beginning of compression take place delayed (1).

The Miller-cycle on the other hand makes use of an early intake valve closing (EIVC). While the piston moves from TDC to BDC within the intake stroke (8-1′), the closing of the intake valve(s) occurs before BDC is reached (1). As a difference to Atkinson the cylinder pressure drops below manifold pressure as the volume is increased with closed intake valve(s) due to the piston downward movement. This generates negative pressure. As a consequence 1′ is at a lower vertical position in the Miller-cycle compared to that of Atkinson. The subsequent piston movement (1′-1) takes place with closed intake valve(s) before the actual compression stroke begins (1). Consequently, both Atkinson- and Miller-cycles exhibit the same reduced cubic capacity and compression ratio.

Research by He, Durrett, and Sun (2008) on this topic shows that a reduction of NO_x emissions by 30-50 % can be reached with LIVC, depending on the operation conditions and injection method. The experiments that have been carried out with a single cylinder engine clearly show the potential of a valve train that can implement the LIVC strategy.[4] Disadvantages concerning engine performance output occur though as with LIVC the cubic capacity and maximum amount of fresh charge partly remain unused. Thus the engine torque output is decreased. This disadvantage is often compensated by turbocharging of the combustion engine. Through this measure the reduced compression ratio is transferred into a raise in boost of the turbocharger. Hence for turbocharged engines the Atkinson cycle can be seen as partial outsourcing of the compression from the combustion chamber into the compressor of the turbocharger.[3]

As mentioned in Section 1, the CO_2 emissions are directly proportional to the fuel consumption. For this reason it is necessary to control the valves as variably as possible to keep the fuel consumption and consequently CO_2 emissions as low as possible within the entire engine speed range. By making use of the Atkinson- or Miller-cycle CO_2 emissions can be reduced significantly as because of the reduced air mass brought into the cylinder less fuel is necessary to reach the stoichiometric mixture or complete combustion respectively. The fuel consumption is reduced by this measure. The Mazda 2 1.3, brought to the market in 2007 is an example of a motor vehicle that is equipped with a petrol engine making use of the Atkinson-cycle.

In the higher engine speed range above $n = 3000\,1/\text{min}$, however, LIVC can be beneficial regarding the engine performance. It increases the cylinder fill factor[¶] significantly as more fresh charge enters the combustion chamber. Only on higher engine speeds the dynamic of the intake charge is of sufficient velocity to enter the combustion chamber while the piston moves into the direction of TDC at the beginning compression stroke with intake valve(s) still open. This of course increases power output and torque.

Then again this leads to the opposite of what the Atkinson-cycle originally aims at. Both CO_2 emissions and fuel consumption on the one hand and cylinder pressure, process temperature and hence NO_x emissions on the other hand will rise. For the best results concerning low emissions and a low fuel consumption the Atkinson-cycle needs to be used in the lower engine speed range exclusively before the effects explained above set in. In order to guarantee this Mazda uses variable valve timing on their "KJ-ZEM" engine which also works according to the Atkinson-cycle.

However, no existing valve train on the market is able to combine an Atkinson-cycle in the low engine speed range with the possibility of either using LIVC on high engine speed ranges to increase performance at the cost of risen emissions or—at low torque request in the high engine speed range—close the intake valve(s) at BDC or even switch to Miller-cycling to reduce the emissions topmost.

To enable an engine speed dependent operation of the intake valve(s) in the above-mentioned way a common camshaft driven valve train will quickly reach its limit even when used in combination with a variable valve timing. The FVVT system due to the absence of camshafts and full adjustability offers significant potential regarding the simultaneous implementation of several valve actuation strategies within the same valve train.

3 Existing technology

3.1 Fiat "TwinAir" and "MultiAir"

The "TwinAir" (two-cylinder version)/"MultiAir" (four-cylinder version) technology appears in two different engines developed by Fiat with cubic capacities of 875 and 1368 cm^3 respectively. Released in 2009 it is the first system on the market and often referred to as the first fully variable valve train even though it only features variability for the intake valve actuation. A sectional view through the cylinder head that includes all system components for one cylinder can be seen in figure 3.

Both the "TwinAir" and the "MultiAir" engine feature a single overhead camshaft layout (SOHC). The exhaust camshaft operates both the exhaust valves directly and the intake valves indirectly. As in conventional modern combustion engines the engine viewed here features two intake valves and two exhaust valves per cylinder. The exhaust valves are actuated by cam lobes and valve lifters similar to those in usual modern combustion engines.

The intake valves are operated with the aid of hydraulic valve actuators as seen in figure 3 in the following way. First the intake cam lobe actuates a piston via a cam follower. The solenoid valve regulates the hydraulic flow from the piston into the valve actuators on the intake side of the engine. When

[¶] ratio between the mixture actually brought into the cylinder and the filling theoretically possible at a given cubic capacity

http://www.saimeche.org.za (open access) © SAIMechE All rights reserved.

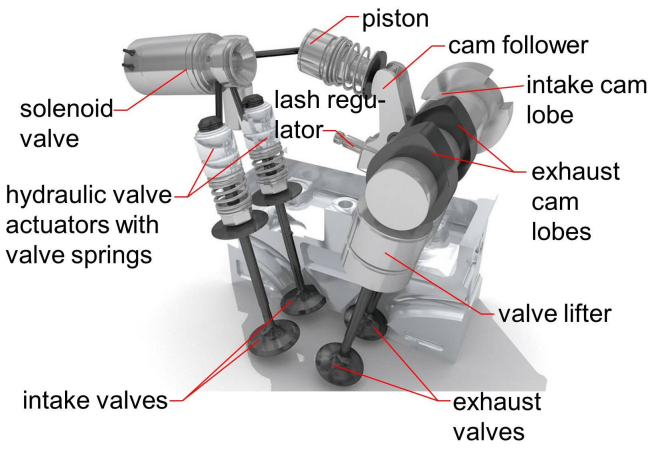

Figure 3 Fiat "Multiair" valve train components.[5] Illustration by Bryan Christie Design (with permission)

the solenoid is being closed, the almost incompressible fluid directly transfers the cam lobe lift into a movement of the intake valves resulting in a fixed valve timing as used in a conventional valve train. By opening the solenoid the hydraulic pressure within the system is reduced as the oil bypasses the paths leading to the valve actuators. This allows variable intake valve actuation. By means of switching the solenoid between its open and closed positions at certain times the timing and lift of the intake valves can be varied. The closing of the intake valves takes place by valve springs as used in a traditional valve train.[6] In summary, "[t]he final part of the valve closing is controlled by a dedicated hydraulic brake to ensure soft and regular landing phase in any engine operating conditions".[7] This is fairly important as the valves require a certain reduction in force before impinging on the valve seat and the touchdown velocity must not exceed the allowed values in order not to damage the valve seat and cylinder head in a long-term view.

Fiat claims that the system can reduce exhaust emissions significantly at increased fuel-economy and higher power output. Advantageous also is the fact that the throttle plate remains fully open while the engine is used under conditions in which "TwinAir"/"MultiAir" can be utilized. In a traditional petrol engine the throttle plate is used to regulate the required amount of air mass flowing into the cylinder. This leads to throttling losses which can be avoided to a certain extent with the "TwinAir"/"MultiAir" technology.

The system features the following five operation modes for variable valve timing and lift:[8,9]

- Full Lift: fixed valve lift according to cam lobe
- EIVC: early intake valve closing; Miller-cycling
- LIVO: late intake valve opening
- Multi Lift: multiple valve lifts within one stroke
- Partial Load: similar to EIVC with larger maximum lift.

All mentioned measures aim at a reduction of emissions and fuel consumption while the "Multi Lift" mode is used at very low engine speeds to improve both turbulence within the cylinder and the velocity of the subsequent combustion. All modes enable the operation of the combustion engine at a raised degree of efficiency.

One of the major disadvantages is the fact that this variety of operation modes can be fully made use of only in the low- to mid-revolution range of the engine. This also explains why the throttle plate is still necessary even though it remains fully open while the mentioned operation modes are being used. On high revolutions the throttle plate is necessary to control the amount of air entering the engine as the intake valves alone cannot be used as only throttle machanism under these conditions. For instance, the "Multi Lift" mode cannot be used at higher engine speeds. Hence, the system is not fully variable. Additionally, only the intake valves are being operated in a variable way while the exhaust valves maintain a fixed valve timing.

3.2 "Electrohydraulic camless valvetrain"

As not any functioning fully variable valve train has been introduced to the market yet a hydraulic approach that has been researched on will be looked at more closely. The "Electrohydraulic camless valvetrain" system, assigned by the "Ford Motor Company" and patented by Schechter and Levin,[10] shows certain analogies to the system that is being developed within this research project and is shown in figure 4.

The main components of this system are an engine valve assembly (10), a hydraulic system (8) and a rotary valve (34). As opposed to Fiat's "TwinAir"/"MultiAir" technology this electrohydraulic solution is usable for both intake and exhaust valves. As seen in figure 4 the system still employs poppet valves (12) as used in common combustion engines. The hydraulic system basically consists of an oil sump (46), a low pressure pump (54) and a high pressure pump (50). Thus it features a low (70) and a high pressure branch (68). A piston (16) is attached to the engine valve stem. While the volume underneath the piston (42) is continuously supplied by the high pressure branch using the high pressure lines (26), the rotary valve is used to distribute hydraulic pressure from either the low pressure branch or the high pressure branch to the volume above the piston (20) in order to open and close the corresponding engine valve. The rotary valve is driven by a motor (60) and controlled by the engine control system (48). Low and high pressure windows are imbedded into the cylindrical body of the rotary valve.

Depending on the position of the rotary valve, the piston on the valve stem can fulfil a reciprocating motion within the limits of the piston chamber according to the hydraulic pressure applied above the piston. The pressure surface area above the valve stem piston in volume (20) is significantly larger than the effective surface underneath it in volume (42). Therefore, the opening of the engine valve becomes possible. Even though at this stage both volumes underneath and above the valve stem piston are connected to identical pressure from the high pressure branch, the difference in surface area results in a larger force acting on top of the piston and hence pushes the engine valve open. In this case oil is led from the high pressure reservoir (22) to volume (20) via the hydraulic lines (26) and (32).

Engine valve closing is carried out by changing the position of the rotary valve as to allow the hydraulic fluid to run from volume (20) to the low pressure fluid reservoir (24) via lines (32) and (28). By altering the position of the rotary valve body with the embedded windows the engine valve acceleration and deceleration can be influenced. The high pressure check valve (36) opens as the engine valve is closing and the displacement

http://www.saimeche.org.za (open access) © SAIMechE All rights reserved.

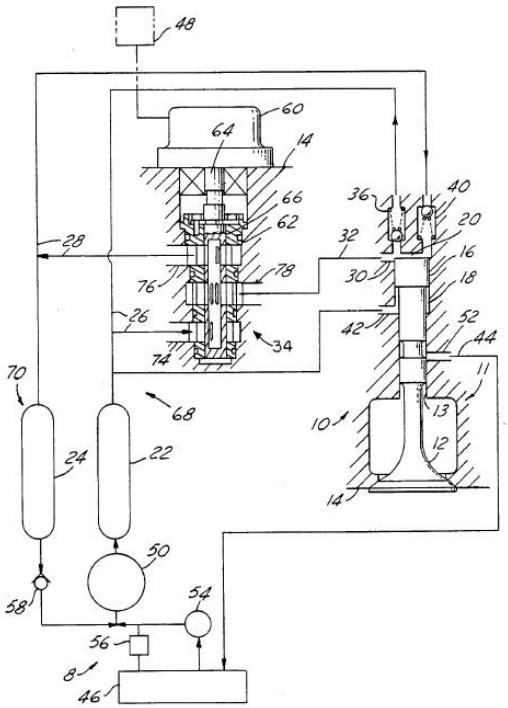

Figure 4 Electrohydraulic camless vavletrain by Schechter at al.[10]

above the valve stem piston decreases. Hydraulic fluid gets pushed out into the high pressure lines (26) so the valve is being decelerated just before it seats. In this way a hydraulic valve brake is realized. With the aid of this the consequences resulting from a hard valve seating (section 3.1) are avoided.

The low pressure check valve (40) opens while the valve stem piston moves downwards as the engine valve is opening. As the valve possesses kinetic energy while reciprocating with high velocity, the engine valve still moves downwards while the corresponding window in the rotary valve body supplying volume (20) with high pressure has already been closed. With the volume above the valve stem piston further increasing void formation in volume (20) can be avoided by opening the low pressure check valve and allowing hydraulic oil to enter. This is highly important and needs to be considered during developing the FVVT system as air is highly compressible and void formation will affect precise control of the engine valve movement.

The system shows large variability concerning the valve operation. For instance, by altering the timing of window crossings within the rotary valve body the timing of engine valve opening and closing can be influenced. By varying the alignment of certain windows the valve lift can be modified. Depending on the applied pressure engine valve velocity and acceleration can be adjusted.[10]

3.3 Conclusion

Same as this research the presented valve train systems aim at full adjustability of the valve operation and increasing the potential of the reciprocating piston engine. Most of these valve train systems offer large potential regarding achievable performance and pollution improvements.

However, the "TwinAir" and "MultiAir" approach by Fiat still shows strong limitations in its functionality. A hydraulic valve actuator that is in development at "Sturman Industries" in Colorado, USA has not been presented due to the very limited published information on the system. The developers claim the ability to amongst others incorporate Atkinson and Miller cycle into the valve motion, but the system still features a valve return spring, which will cause limitations regarding full adjustability of the engine valve movement, especially at high engine speeds.[11]

The FVVT system features the main advantage that the mechanically moving parts camshaft, cam followers and engine valve springs will be removed from the valve train. Very good results concerning system control and response could be achieved in the previous FVVT system with direct control by employing a piezo actuator. The piezo is able to overcome all mass forces, while at the same time enabling the required displacement by using a lever transmission. The capability of a very high actuating frequency, possible due to the fact that the piezo displacement before the lever transmission is maximal $s = 180\,\mu m$ only, allows precise control for high simulated engine speeds, being a significant advantage compared to other technologies. Hence, the redesigned FVVT system will maintain the utilization of a piezo actuator. Other than before, system control will be indirect. That means, the piezo does not act on the servo piston in the servo valve directly anymore, but acts on another piston with significantly smaller displacement ($s = 3$ mm instead $s = 10$ mm as before) that is moving inside a second, piloted valve (control unit) that is used to control the hydraulic pressure in the servo valve. Thus, the servo piston is moved as a consequence of the piston position in the control unit, which the piezo acts upon. This is why the control now is called "indirect". In the previous FVVT system, the piezo had to enable a displacement of $s = 10$ mm after the lever transmission. The main advantage of the redesigned system is that now the reduced displacement of only $s = 3$ mm needs to be realized, which means the piezo's size can be drastically reduced, which is a step towards the implementation of the system in a real combustion engine (packaging and weight advantages) and lower acceleration of parts in motion, interesting especially with regard to flawless control at high frequencies.

The system will enable full variable engine valve control, independent from limitations occurring due to spring properties or large oscillating components. Identical to the presented systems the transmitting medium of the engine valve actuator will be hydraulic oil, enabling a sufficient reaction time of the system, allowing to adjust the engine valve position for best efficiency with lowest possible emissions at any time. The "Electrohydraulic camless valvetrain" (Schechter and Levin, 1996) shows significant similarity to the FVVT system.

4 Mathematical Methods

Mathematical fundamentals have been used to enable an FVVT system layout according to the maximum simulated engine speed and to determine the size of all hydraulic sections and the required properties of the utilized compression springs.

4.1 Actuator frequency

The FVVT system at present is being used up to a maximum theoretical engine speed of $8000\,^1/_{min}$. Due to the camshaft and crankshaft rotation ratio of 1 : 2 the speed of

http://www.saimeche.org.za (open access) © SAIMechE All rights reserved.

both camshafts in this case is equivalent to $4000\,^1/_{\min}$. Narrowing down the view towards the FVVT system actuating two engine valves, the required actuation frequency and hence resulting system resonance frequency f_0 can be calculated as follows:

$$f_0 = \frac{n_{cs}}{60\,\frac{\mathrm{s}}{\mathrm{min}}} = \frac{4000\,\frac{1}{\mathrm{min}}}{60\,\frac{\mathrm{s}}{\mathrm{min}}} \tag{1}$$

$$= 66.67\,\mathrm{Hz} \approx 67\,\mathrm{Hz} \tag{2}$$

where

n_{cs} = rotational speed of the camshaft(s)

This means that with regard to the conventional K71 engine the engine valves are being actuated approximately 67 times per second at the maximum engine speed referred to above. According to the reciprocal value of f_0 the time available for one valve actuation is $t_{act} = 14.9$ ms. Due to the fact that the cam lobe profile of the camshaft viewed, only exhibits lift on circa 52 % of the camshaft circumference the actual time available for one valve operation t_{open} is as follows:

$$t_{open} = \frac{\alpha_{open} \cdot 60\,\frac{\mathrm{s}}{\mathrm{min}}}{\alpha_{cs} \cdot n_{cs}} = \frac{188^\circ \cdot 60\,\frac{\mathrm{s}}{\mathrm{min}}}{360^\circ \cdot 4000\,\frac{1}{\mathrm{min}}} \tag{3}$$

$$= 7.83\,\mathrm{ms} \tag{4}$$

where

α_{open} = valve actuation angle of the camshaft

α_{cs} = camshaft rotation angle

The value for t_{open} seems plausible and can be proved with the aid of figure 5 showing experimental results of the FVVT system as it is actually being used.

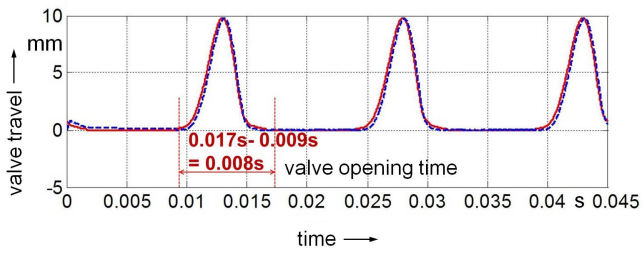

Figure 5 Standard K71 valve lift curve at $8000\,^1/_{\min}$

The graph shows the valve lift versus the elapsed time at an engine speed of $8000\,^1/_{min}$. The blue curve shows the simulation result recorded on the valve test bench at the "Ostfalia University of Applied Sciences" in Wolfsburg while the red curve shows the original valve lift of the K71 which is of interest for considering the valve opening time of the original engine as the simulation still includes a slight deviation.

The time within which a valve is actuated once is marked and is equivalent to approximately 8 ms. Conventionally the engine valves are being pushed open by the cam lobe and closed again by the valve springs within t_{open}. As the piezo actuator extends by the application of voltage and contracts again when voltage supply is cut it only needs to be actuated once to move the servo piston into one direction (voltage applied) and back again (voltage interrupted). The piston is moved only into one direction by an electric cause while the movement back into the other direction is caused mechanically. This can also be ensured within the redesigned system as a return spring still will be in use. As a consequence, the servo piston, amongst all other internal system components, moves with twice the frequency f_0 the piezo is actuated with, summing up to $2 \cdot f_0 \approx 2 \cdot 67\,\mathrm{Hz} = 134\,\mathrm{Hz}$.

As the resonance frequency is known the resulting eigen angular frequency ω_0 can be calculated:

$$\omega_0 = 2 \cdot \pi \cdot f_0 = 2 \cdot \pi \cdot 66.67\,\mathrm{Hz} \tag{5}$$

$$= 418.90\,\frac{1}{\mathrm{s}} \tag{6}$$

All moved masses within the system core must be laid out concerning this value to ensure the system does not reach resonance.

4.2 Compression spring layout

With the aid of the critical eigen angular frequency calculated before, the required spring stiffness were determined by using the following fundamentals. For the eigen angular frequency Equation 7 is valid:

$$\omega_0 = \sqrt{\frac{c_1}{m_{trans} + \frac{m_s}{3}}} \tag{7}$$

where

c_1 = spring stiffness

m_{trans} = mass of the components in motion

m_s = mass of the spring

Converted according to the spring stiffness this results in:

$$c_1 = \omega_0^2 \cdot (m_{trans} + \frac{m_s}{3}) \tag{8}$$

4.3 Layout of hydraulic sections

To ensure that the control unit is able to reliably control the FVVT system up to the current maximum thoretical engine speed of $8000\,^1/_{\min}$, the oil volume being displaced by the servo piston within the servo valve in any circumstance has to be successfully returned into the oil reservoir with the aid of control edges that are operated by the piston. The diameter of the piston elements of $d_{10} = 11$ mm has been chosen in order to be able to maintain some of the existing servo valve internals of the previous FVVT system, that already has been designed for optimal hydraulic flow. The rod diameter of the piston, $d_{13} = 4$ mm, allows for the piston to be guided in the servo valve while at the same time offering safety against bending and the possibility to connect the piston to the chosen displacement transducer by using a coupling. The largest possible oil volume has to be discharged when the servo piston is moved from one mechanical stop to the other. Executing this motion it travels its maximum distance of $10\,mm$. The maximum oil displacement volume is illustrated in figure 6.

The oil displacement volume V_{dis} calculated as follows:

$$V_{dis} = \frac{\pi}{4} \cdot h_{dis} \cdot (d_{10}^2 - d_{13}^2) \tag{9}$$

$$= \frac{\pi}{4} \cdot 0.01\,\mathrm{m} \cdot ((0.011\,\mathrm{m})^2 - (0.004\,\mathrm{m})^2) \tag{10}$$

$$= 8.25 \cdot 10^{-7}\,\mathrm{m}^3 \tag{11}$$

where

h_{dis} = height of the oil displacement volume

d_{10} = servo piston diameter (piston element)

d_{13} = servo piston diameter (rod)

http://www.saimeche.org.za (open access) © SAIMechE All rights reserved.

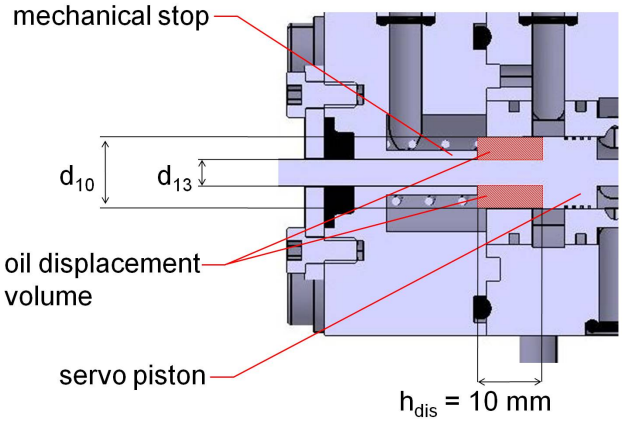

Figure 6 Oil volume displaced during reciprocating servo piston motion

5 Redesigned FVVT system

The basis of the FVVT system is an electrohydraulic engine valve actuation technology that uses a directly controlled servo valve as one of the main components to control the engine valve lift fully adjustable.

The main advantage of this system is the combination of the piezo's precision with the force of the hydraulic actuator, which is a good basis for variable engine valve timing. On the other hand, the piezo displacement needs a large lever transmission ratio of 100, so the servo piston can reach all switching positions within the servo valve. As a consequence the piezo actuator is comparatively large. Another disadvantage is that the center position of the servo piston as initial point of experiments must gradually be adjusted.

The altered version of this system that has been finalized within this research project, is based on the main components piezo actuator and servo valve and builds on the main thought of combining precision and hydraulic force. Other than before, the redesigned system will be controlled indirectly. It will feature the advantage of a significantly reduced lever transmission ratio that allows to reduce the piezo's size in future projects. Additionally, the center position of the servo piston within the servo valve will be self-adjusting by the use of two identical compression springs on either side of the piston.

5.1 System components

The two core components, servo valve and control unit, have been designed for the purpose of being used within an indirectly controlled system. Figure 7 shows the system layout.

The FVVT system involves the main components valve assembly (1), high speed servo valve (2), piezo actuator with lever transmission (3), control system (4) and hydraulic unit (5). By using an oil pickup (A) and hydraulic line (B) an adjustable hydraulic axial piston pump delivers hydraulic oil from the oil reservoir (6) to the lever transmission that is directly connected to the piezo actuator. Line (C) is used to eject oil from the lever transmission into the oil reservoir when a pressure adjustment is needed or to bleed the oil-filled volume of the transmission. The system pressure is 150 bar or 15 MPa respectively. A hydraulic line (D) supplies the servo valve with hydraulic oil.

The voltage applied to the piezo actuator is delivered by an amplifier that is part of the control system. In dependency

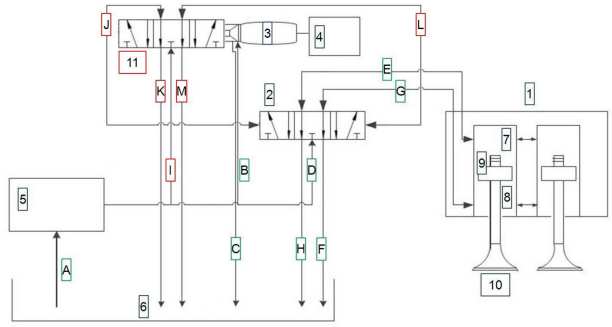

1:	Valve assembly	2:	Servo valve
3:	Piezo actuator	4:	Control system
5:	Hydraulic unit	6:	Oil reservoir
7:	Volume over piston	8:	Volume under piston
9:	Valve stem piston	10:	Engine valves
11:	Control unit	A-M:	Hydraulic lines

Figure 7 Redesigned indirectly controlled FVVT system

on voltage value and cycle time the piezo actuator fulfils a reciprocating movement as the crystals extend when voltage is applied and contract when the supply is interrupted. This movement is transferred onto a translation piston featuring a diameter of 20 mm that is positioned within the lever transmission. The latter is oil-filled under any condition and as a consequence of the piston movement pressure is applied to the hydraulic transmitting medium. As the oil is almost incompressible and the lever transmission is closed towards the atmosphere, the force of the piezo actuator is transferred onto the effective surface area of the control piston with a substantially smaller diameter of 4 mm.

The valve assembly contains two poppet valves (10) that each have a piston (9) on the valve stem. A volume above the piston (7) is connected to hydraulic line (E) and a volume underneath the piston (8) to line (G). Lines (E) and (G) are included into the engine valve body and can be used in two directions. Depending on the position of the servo piston in the servo valve either the volume above or underneath the piston is supplied with hydraulic oil or both volumes are disconnected from the pressure supply. In any piston position it is impossible to connect both volumes to the hydraulic pressure supply at the same time. Both valves can be moved within the displacement of the valve stem piston chamber formed by volume (7) and (8). Contingent on the operating mode of the system lines (F) and (H) are used to eject excess oil into the oil reservoir when the displacement of the oil-filled volume (8) or (7) is being reduced due to the valve movement. Both valves are operated in the same way due to the fact that both volumes above the valve stem pistons are connected and attached to the same line (E). The same is valid for the volumes underneath the pistons in respect of line (G).

The new system has been extended by a control unit (11) and hydraulic lines (I) to (M). All added system components are marked in red. The redesigned system utilizes hydraulic lines (J) and (L) that, such as lines (E) and (G), can be used in two directions, indicated by the black arrows.

Lines (K) and (M) are oil return lines leading from the control unit into the oil reservoir similar to lines (H) and (F) used for the servo valve (2). Line (I) feeds pressurized hydraulic fluid into the control unit in order to change the servo piston position by pressurizing line (J) and/or (L).

http://www.saimeche.org.za (open access) © SAIMechE All rights reserved.

5.2 Block diagram of the FVVT setup

A block diagram of all required FVVT system components is illustrated in figure 8.

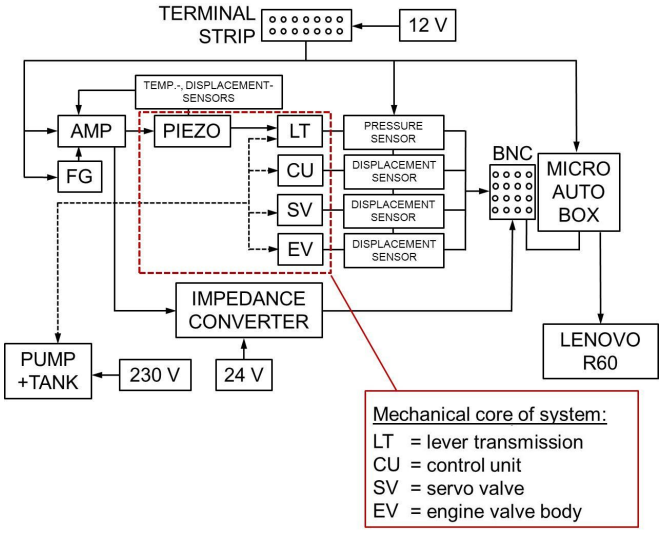

Figure 8 Block diagram of the indirectly controlled FVVT system

A terminal strip is powered by a 12 V power supply and supplies voltage to the piezo amplifier, function generator, all external sensors and the MicroAutoBox, which is the control unit used within this project. The function generator connects to the "Control In" of the piezo ampflifier, providing the signal sent to the actuator. The piezo is powered directly by the amplifier and uses a displacement and temperature monitoring sensor that also connect to the amplifier. From here, the position signal output connects to the input of an impedance converter using a modified BNC[‖] cable. The converter is used to adjust the voltage range of this signal so it can be read by the MicroAutoBox and is powered by a Siemens PLC 24 V power supply. The output of the impedance converter is designed as a BNC connection. A BNC cable connects from the output "SGPIEZO" of the converter board directly to the BNC input box that is connected to the MicroAutoBox.

Three Gefran PY2C25 displacement sensors and one Parker Hannifin pressure sensor type PTDVB1001B1C1 are implemented into the mechanical core of the system (consisting of LT, CU, SV and EV), which is driven by the piezo actuator and supplied with hydraulic pressure by a pump (compare broken line in figure 8), that requires a 230 V power supply and a tank, which the hydraulic fluid can return to. While the pressure sensor monitors the hydraulic pressure within the lever transmission, the displacement sensors are used to monitor the motion of the

1. Control piston in the control unit
2. Servo piston within the servo valve
3. Engine valves.

The cables of the three displacement sensors and the pressure transducer have been built in such a way as to enable a connection to the terminal strip for the power supply while the sensor signal wires connect to the input box of the MicroAutoBox using a BNC connector. An Ethernet cable is used to connect the MicroAutoBox to the Lenovo R60 research laptop.

[‖]BNC = Bayonet Neill-Concelman Connector

5.3 System operation

The combined switching positions of the control unit, directly influenced by the piezo actuator position and the servo valve that is operated indirectly by changing the pressure distribution in lines (J) and (L) can be seen in figure 9.

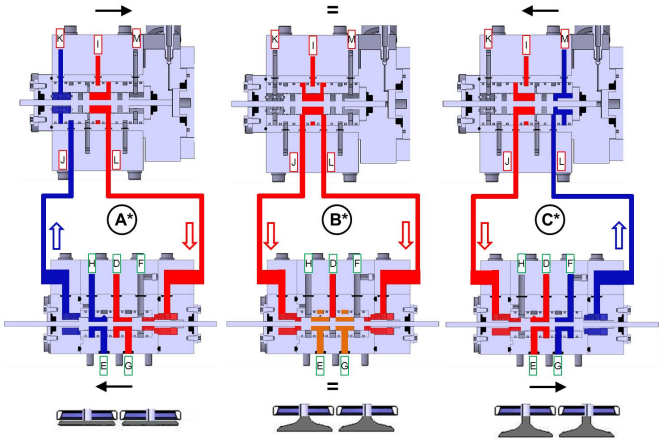

Figure 9 Altered basic control positions of the redesigned FVVT system

For all three switching positions the control unit has been added above the servo valve. The black arrows above the control unit indicate the movement of the piezo actuator and control piston, whereas the black arrows underneath the servo valve represent the movement of the servo piston. The arrows in red and blue show the flow direction of the hydraulic lines active in the respective case.

The resulting engine valve movement can be taken out of the illustration at the bottom of figure 9. All hydraulic lines mentioned beforehand ((I) to (M) and (D) to (H)) are marked for a better understanding of the valve actuation procedures explained below:

- Case A* (valve closing)

No voltage is applied to the piezo actuator which remains fully contracted. Translation and control piston remain in their utmost right hand position (with regard to figure 9). The latter is kept against its mechanical stop by the force of the compression spring used within the control unit.

Pressurized hydraulic fluid runs from line (I), which serves as a pressure supply to the control unit, via line (L) to the right hand side of the servo piston in the servo valve. At the same time the duct to the utmost left piston element of the control piston is opened, allowing the hydraulic fluid on the left hand side of the servo piston to exit the servo valve using lines (J) and (K). The duct that leads from the pressure supply (I) to line (J) is kept closed by the second control piston element from the left which ensures an unhindered pressure decrease on the left side of the servo piston.

As a consequence of the pressure difference between its left and right end surfaces the servo piston is pushed against its left mechanical stop. This results in engine valve closing. As no voltage is applied to the piezo actuator in this case, the valve closing as a safety measure at an electric power breakdown can be maintained. This way interference of the engine piston and engine valves after a system failure can be avoided while the system is operated in a combustion engine. The control piston blocks the hydraulic line (M) so no pressurized fluid from line (L) can return into the oil reservoir.

http://www.saimeche.org.za (open access) © SAIMechE All rights reserved.

- Case B* (center position of the servo piston)

By applying a voltage to the piezo actuator that results in half of its maximum travel range, the control piston reaches the center position within the control unit. The piston element to the furthest left closes the duct leading to line (K) and the piston element to the right of this opens a duct allowing the pressure supply to flow into line (J). Hence line (J) is used, as opposed to Case A*. The internal duct of the control unit leading from the pressure supply (I) to line (L) remains opened as in the previous case. Oil return line (M) stays blocked, so that hydraulic pressure in lines (J) and (L) cannot escape into the oil reservoir through lines (K) or (M).

This leads to a full system pressure equivalently being applied to both sides of the servo piston within the servo valve. The two identical compression springs in the servo valve ensure that the servo piston is moved into the center position as the balance of forces alone, being a consequence of the equal pressure distribution does not lead to a piston movement. In this way the initial position of the system or maintaining a certain valve position during system operation can be realized. Neither the hydraulic pressure supply is connected to volume (7) or (8) (compare figure 7) nor hydraulic fluid can exit the valve body. As both volumes remain constant in this configuration the current valve position is being held continuously.

- Case C* (valve opening)

When voltage supply to the piezo is increased the actuator and translation piston move further to the left (with regard to figure 9). With the aid of the lever transmission the control piston is also moved and reaches its furthest left hand position within the control unit. Its second piston element from the right closes the duct leading from the pressure supply (I) to line (L). The duct leading to line (J) remains opened and line (K) is kept blocked. Full system pressure reaches the left side of the servo piston in the servo valve. The first control piston element from the right opens another duct allowing hydraulic fluid to run from the right hand side of the servo piston into the reservoir using line (L) and return line (M).

Contrary to Case A* the servo piston is pushed against its right mechanical stop resulting in opening of the engine valves. After voltage supply has been cut, the control piston is pushed back against its mechanical stop within the control unit by the return spring, resulting in valve closing according to Case A*.

As in all mentioned cases lines (J) and (L) are strictly used either as the return line or pressurized with full system pressure, the above listed requirement of an unresisted pressure decrease is fulfilled. However, still the acceleration and deceleration of the engine valve movement can be influenced by approaching intermediate positions between the three illustrated control piston positions. This can be used to manipulate the pressure decrease in line (J) during engine valve closing and in line (L) during engine valve opening.

This again has an effect on the position of the servo piston which partly closes the hydraulic ducts within the servo valve influencing the time required to fill or drain the volumes above and underneath the valve stem pistons. Due to this fact the system keeps full variability of the valve movement control which is also of high significance for the engine valve brake that can be implemented into the new system.

5.4 Conclusion

Based upon the design results of a feasibility study from the year 2010 a new and advanced electrohydraulic "Full Variable Valve Train" system which is controlled indirectly has been designed with the aid of CAD. The existing FVVT system is expanded by a control unit that is used to manage the indirect control of the modified servo valve.

6 Results and discussion

6.1 Engine valve test bench

Figure 10 shows the assembled test bench, carrying all components required for testing the redesigned FVVT system.

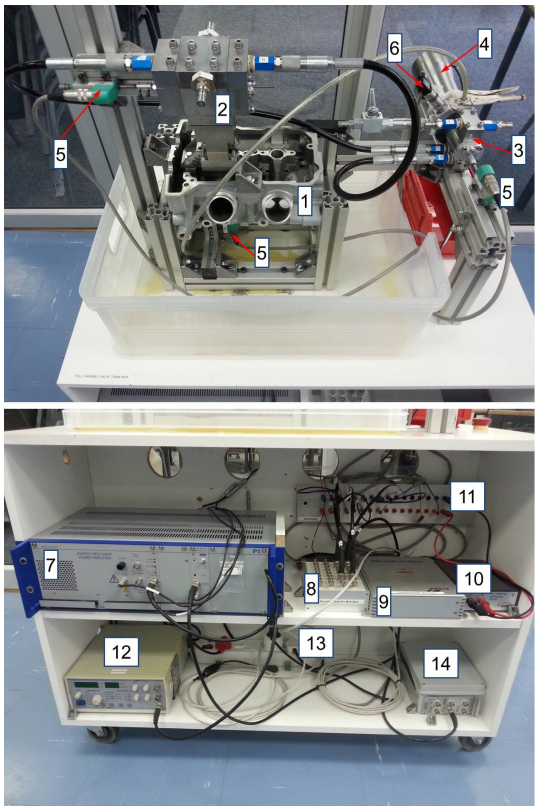

Figure 10 Test setup of the indirectly controlled FVVT system

The test bench is designed to be mobile in order to run experiments with the FESTO hydraulic training facilities of the "Nelson Mandela Metropolitan University". For this purpose all components are mounted on a movable table.

The core of the test setup is the BMW K71 cylinder head (1) with the engine valve body and servo valve (2) mounted on top. Since the cylinder head was not designed to carry the components of the FVVT system, it needed to be modified. The bearing bridges that normally the intake and exhaust camshaft rest on have been removed to produce the space required in vertical direction. Hydraulic lines are used to connect the servo valve with the control unit (3). The piezo actuator (4) is directly connected to the control unit. The displacement transducers (5) are mounted to the servo piston of the servo valve, to the control piston of the control unit and to one of the two intake valves of the engine, that open and close simultaneously. As mentioned before, the test bench at this stage of development is simplified to operate one pair of

http://www.saimeche.org.za (open access) © SAIMechE All rights reserved.

intake valves and does not operate all eight engine valves at the same time. The pressure transducer (6) connects to the lever transmission. A plastic collection pan has been added to keep any spilling hydraulic oil from entering the inside of the table, where the electronic components of the test bench are accommodated.

The ampflifier for the piezo actuator (7), the MicroAutoBox (9) with the connected BNC input box for the sensors (8), the 12 V power supply (10) for the sensors and the MicroAutoBox, and a terminal strip (11) are placed on the center level of the table. The function generator (12) that generates the signal sent to the piezo actuator and a 24 V power supply (13), connected to an impedance converter (14), are stored in the bottom level of the table. The connection between the components correlates to the block diagram that was shown in the previous chapter (compare figure 8).

6.2 Engine valve lift curve

The experiment was run with a lever transmission pressure of 4.2 MPa. A low frequency of 2.5 Hz, equaling a theoretical engine speed of 300 $^{1}/_{min}$, was chosen to allow for a precise analysis of all events occurring during the engine valve actuation process. The engine valve opening time as seen in the graph equals 0.26 s for the viewed case. With the model sampling time of 90 µs in combination with the preset downsampling factor of 14 in ControlDesk, a data point is being recorded every 1.26 ms, or reciprocally 793 data points are collected per second. Multiplying these with the mentioned engine valve opening time, emphasizes that the chosen low experimental frequency displays each valve lift trajectory using 206 data points. In comparison, with the preset downsampling factor, for a simulated engine speed of 2000 $^{1}/_{min}$, one valve lift curve would be represented by only circa 30 data points, not allowing the same degree of detail for a precise analysis of the occurring events. Figure 11 shows the results.

In figure 11, the piezo actuator graph shows horizontal maxima throughout without any overshoot or inconsistency. As a consequence, the trajectories of control piston, servo piston and engine valves follow this behaviour accurately. In all graphs, except for the piezo actuator, a form of vibration can still be seen (1), that originates from the control piston and is reflected in all subsequent graphs.

The servo piston reciprocates between 0 and close to 10 mm as desired, being very uniform until the last maximum (2) that drops to 7 mm due to the decreasing control piston displacement caused by a slight oil leak within the lever transmission.

The final output, the engine valve trajectory, is oscillating between 0 and 10 mm accurately and repetitively. Even the last shown, reduced servo piston maximum, is sufficient to enable full engine valve opening. In figure 12 the graph showing the dynamic lever transmission pressure can be seen.

The graph directly correlates to the piezo actuator motion. For each reciprocating movement two distinctive peaks can be found. The first peak is a narrow maximum reaching 10 MPa, that occurs as the piezo actuator pushes the translation piston into the oil volume of the lever transmission. After a fraction of a second the pressure drops quickly by about 3 MPa and later in the experiment by about 4 MPa and stays relatively level. As soon as the piezo actuator and connected translation piston reach the zero position, the pressure drops down abruptly, forming a peak heading downwards, that looks similar to an inversion of the afore-mentioned 10 MPa peak. During the experiment, the pressure drops to values close to 1 MPa and below. While the piezo actuator remains at zero displacement, the pressure initially levels out at around 4.2 MPa, equal to the pressure supplied to the lever transmission, and from there in the subsequent steps drops gradually due to the afore-mentioned oil leak of the rod seal within the lever transmission. The explained event repeats in an identical way for each reciprocating movement of the piezo.

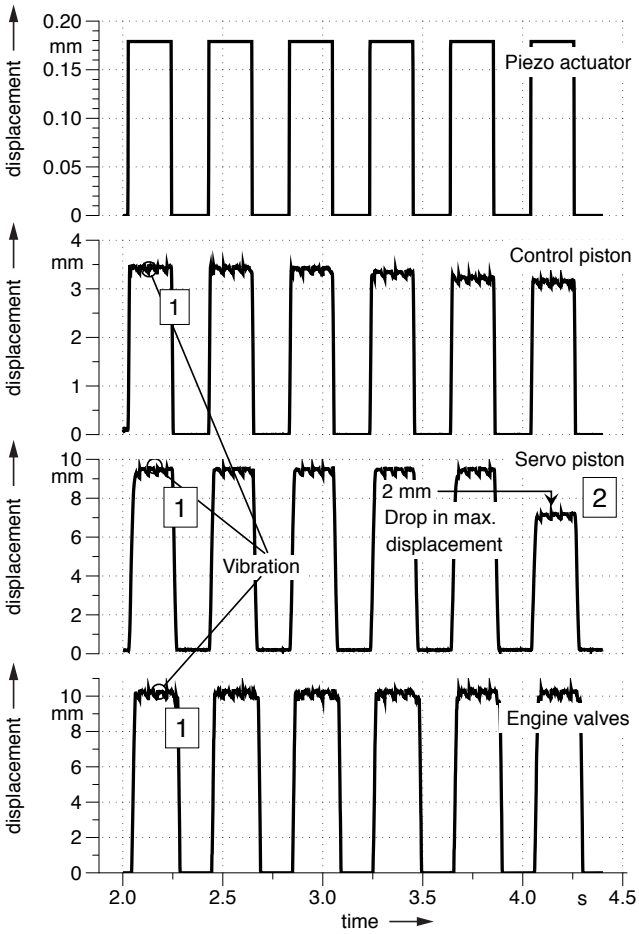

Figure 11 Full experimental setup; optimized rectangular function

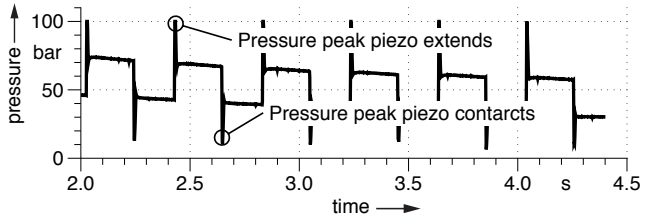

Figure 12 Dynamic lever transmission pressure; optimized rectangular function

Full adjustability of the engine valve lift curve for any simulated engine speed is not yet fully enabled, but after finishing touches on the mechanical side of the system, it definitely has the potential to be operated in an even far wider range.

Generally speaking for the redesigned FVVT system, during experimentation the center position of the servo piston

http://www.saimeche.org.za (open access) © SAIMechE All rights reserved.

within the servo valve at no point needed to be fine-adjusted, as this is determined by the two identical compression springs used in the valve, which is an advantage compared to the previous FVVT system, where the center position needed to be approached gradually to reach the initial setpoint to start tests.

Another advantage is that in the case of a power cut, the piezo contracts immediately, and due to the layout of the hydraulic ducts, in this position instantaneously closes the engine valves. This is important with regard to an implementation of the system on a combustion engine, where the piston otherwise may interfere with the engine valves in TDC when an electrical fault occurs, which would lead to deterioration of the engine. This cannot occur with the redesigned FVVT system.

Further, the indirectly controlled system features unrestrained motion of the hydraulic transmitting medium in all hydraulic lines, giving the system an advantage over the design in the presented feasibility study and solving one of the research requirements at the same time.

7 Conclusion

The presented innovative electrohydraulic FVVT system makes use of the properties of a piezo-ceramic-based stack actuator, combining the piezo's precision with the force of a hydraulic actuator, operating the engine valve motion.

To further enhance the system, which aims at an improved overall efficiency of the combustion engine, lowering fuel consumption and CO_2 emissions while improving power output by replacing the conventional standard components camshaft, cam followers and valve springs, this research project focuses on the modification of the engine valve actuator to an indirectly controlled system, improving the system control.

Based on a feasibility study from 2010, a largely redesigned engine valve actuator could be manufactured and tested at the "Nelson Mandela Metropolitan University" in Port Elizabeth, South Africa, based on mathematical considerations and computer aided component design.

The redesign offers the advantage of a reduced effective piezo actuator displacement, allowing the implementation of a smaller actuator in future, which leads to reduced velocities and mass forces of the movable parts the piezo acts upon. After several improvement activities the indirect control of the hybrid electrohydraulic actuator proves to be successful. The existing Simulink model, subject to previous research at the Ostfalia University, has been used as a basis for the system control and could successfully be adapted to the new actuator design.

Since the system still features limitations regarding full adjustability of the valve lift curve and usable signal function forms due to slight oil leaks and its early stage of development, future research should focus on refining the mechanical properties of the system to realize its full potential.

An approach using rotary instead of poppet engine valves, while maintaining the benefits of a piezo actuator, is imaginable. Research in this direction is currently being undertaken by Zibani, Chuma, and Marumo (2014), featuring flexible valve event control on a single piston rotary valve engine control unit.[12]

This continuous research and its results are a contribution to the development of more efficient, environment friendly engines for motor vehicles, implementing innovative technology into conventional powertrains, that are able to meet the latest emissions legislation and industry demands.

References

[1] *Jung A*, *Alternativantriebe: Warten auf Gruen*, Press report by Spiegel Online, 2014, www.spiegel.de/spiegelwissen/alternativantriebe-wie-umweltfreundlich-elektro-und-hybridmobile-sind-a-1000702.html.

[2] *Van Basshuysen RV and Schäfer F* Internal Combustion Engine Handbook: Basics, Components, Systems, and Perspectives, SAE International, 2004.

[3] *Eichlseder H, Klell M, Schutting E, Neureiter A, Fuchs C, Schatzberger T and Kammerdiener T*, *Miller- und Atkinson-Zyklus am aufgeladenen Dieselmotor*. Technical Report, Hamburg University of Applied Sciences, Hamburg, Germany, 2007.

[4] *He X, Durrett R and Sun Z*, *Late Intake Valve Closing as an Emissions Control Strategy at Tier 2 Bin 5 Engine-Out NOx Level*. SAE International Journal of Engines, 2008, Paper 2008-01-0637, 427-443.

[5] *Anonymous*, *Fiat's Multiair Valve-Lift System Explained*, Car and Driver, 2009, November, `www.caranddriver.com/features/fiats-multiair-valve-lift-system-explained`.

[6] *Anonymous*, *Light-Duty Vehicle Technology Cost Analysis, Mild Hybrid and Valvetrain Technology*, Technical Report No. EPA-420-R-11-023, United States Environmental Protection Agency (EPA), 2011.

[7] *Shekaina J and Jayasingh T*, *Novel Configuration for Air Flow Rationalization and Turbo Lag Reduction in CRDI Engine*, International Journal of Scientific and Research Publications, 2012, 2(9), 1-4.

[8] *Ferrari A*, *The Fiat Multiair Technology: A step towards high efficiency SI engines*. Technical Report, Fiat Powertrain Technologies, Turin, Italy, 2009.

[9] *Vanhaelst R*, *Alternative Antriebe: 2. Thermische Antriebe: 2.2 Viertakt-Kolbenmotoren - Potentiale und Trends*. Lecture Notes, Ostfalia University of Applied Sciences, Wolfsburg, Germany, 2013.

[10] *Schechter M-M and Levin M-B*, *Electrohydraulic Camless Valvetrain with Rotary Hydraulic Actuator*. United States Patent 5,562,070, Dearborn, MI, USA, 1996.

[11] *Anonymous*, *Hydraulic Valve Actuation*, Sturman Industries, `sturmanindustries.com/Solutions/Products/HVACamless/HydraulicValveActuation/tabid/202/Default.aspx`, 2014.

[12] *Zibani IB, Chuma JM and Marumo J*, *Design, Test and Implementation of a single piston rotary valve Engine Control Unit*, World Congress, 2014, Vol 19, 5665-5670.

http://www.saimeche.org.za (open access) © SAIMechE All rights reserved.