System Integration Performed on the CAESAR USAR Robot

R. Stopforth[a] and G. Bright[a]

Received 13 October 2010 and accepted 1 June 2012

Rescuers have lost their lives in events requiring them to go into dangerous areas that have unstable structures, gases and environments. Robots are necessary for search and rescue purposes, to access concealed places and environments that fire fighters and rescue personnel cannot gain entry to. The contractible arms elevating search and rescue (CAESAR) robot was designed and developed to assist rescuers in urban search and rescue (USAR) scenarios. For the performance and reliability required in locating victims, different systems are integrated and used.

Additional Keywords: Remote control, World Trade Centre, hazardous environment

Nomenclature

D_n	danger that gas n has on robot ($flammable_{min}$)
m	number of gases not giving danger warnings and that $w_n \neq 0$
n	number of gases being considered
p	number of gases that give an unsafe warning
q	number of gases that give a danger warning
w_u	unsafe human weighting factor
w_d	dangerous human weighting factor

1. Introduction

Robots are necessary for search and rescue purposes, to access concealed places and environments that fire fighters and rescue personnel cannot gain entry to. Three hundred and forty-three fire fighters died at the World Trade Center during the September 11 attacks in 2001[1]. Sixty-five of these rescuers died due to searching confined spaces that had flooded [2]. Several hours are lost when rescuers are unsure of buildings stability. Frequently the rescuers have to evacuate even though a body part of a possible survivor is seen, due to unstable surroundings [3]. Search robots can also be used to access mines after an accident prior to rescuers workers entering unstable shafts[4].

The advantage of these robots over rescue members is that the disaster areas can be entered immediately after a disaster. Thus the University of South Florida was involved in the rescue attempts at the World Trade Centre in 2001 with its robot system to assist rescuers to locate victims.

Problems identified at the World Trade Centre as well as at the testing grounds of the National Institution of Standards and Technology (NIST) were that the robot's traction system malfunctioned [5] . Other problems observed were unstable control system, chassis designed for narrow range of environmental conditions and limited wireless communication range in urban environment as well as unreliable wireless video feedback [6]. Further problems experienced were that the setup time of the robots was too extensive and the human to robot ratio for transport and controlling were not ideally 1:1 [5] .

To address such shortcomings the procedures for the design, development, analysis and assembly of the mechanical aspects for the contractible arms elevating search and rescue (CAESAR) robot are discussed in the following. Electrical interaction is required with the mechanical aspects of the robot and these are also discussed. A feature of the development is that simultaneous operation of the mechanical and electrical modules creates a robot that solves many problems previously encountered.

Mainly the following problems were encountered with robots previously used: communication, chassis design, traction and sensory systems. Improvements are required for the successful localization of victims. Research on improvements in these areas is developed for the use in the CAESAR robot.

Successful rescues require data, voice and video communication between the control station and the robot. The data communication is required to send instructions to the robot and to receive vital information of the surroundings. Video transmissions from the robot allow rescuers to view dangerous environments, while voice communication allows the rescuers to talk to victims for information and to comfort them.

The integration of the systems used in the CAESAR robot, allowing successful interaction is further explained below. The specifications that were considered were the following:

- Size: Small as possible, containing all modules required. Maximum size: 1 m x1 m x 0.5 m
- Max incline climb: 45°
- Power supply: Battery operated
- Communication: Using UHF frequencies supplied by local fire department. Maximum output power: 5 W
- Vision: Thermal camera
- Sensors: Tilt, gas, arm positions, temperature, sonar
- Survivability: flash fires, continuous 200 ˚C rating

a Mechatronics and Robotics Research Group (MR^2G) – Search and Rescue Division
School of Mechanical Engineering,
University of KwaZulu-Natal, Durban
E-mail: stopforth@ukzn.ac.za

http://www.saimeche.org.za (open access) © SAIMechE All rights reserved.

The methodology of the research consisted of a literature review, design, simulation, development, testing and improvement on the design if needed. This methodology was performed in a controlled laboratory environment before being implemented with the robot for the harsh environments.

2. Communication

Communication is vital for the successful operation of an USAR robot. Video, data and voice communication is required. UHF frequencies and at least 5 W output power from the transmitters are required for low interference through the building materials and rubble [7].

2.1 Voice and Video Communication

The decision was taken to use the Yaesu VX-7R and VX-3E transceivers. These radios can be modified to operate on the assigned emergency bands and have different useful features. Diagrams of the Yaesu VX-7R [8] and VX-3E [9] are shown in figure 1.



Figure 1: Diagram of the Yaesu VX-7R and VX-3E radios

The Yaesu VX-7R is used in the control unit. It has the useful characteristic of a keypad, allowing the rescuers to tune into frequencies other than those used for the robot, if so required. With this radio it is possible for the rescuers to tune into the audio frequency of the video transmission from the robot, should the sound from the television be unclear. An ear piece with microphone is used in the Yaesu VX-7R radio, to allow the controller to communicate with any victims. The voice activation function could be set to allow transmission of spoken voice.

The Yaesu VX-3E is used mainly for reception of audio input detected by the robot. The useful characteristics of the Yaesu VX-3E are that it is small in size, lightweight and can operate at the temperature levels that could possibly occur in the robot.

A 1.5 mm earphone plug is used for the Yaesu VX-3E radio and connected to an 8 Ω speaker. Research was performed to determine whether speakers were available that would be able to resist the high temperatures, but none were found. An ordinary speaker is used to prove the principle.

The video signal is supplied by a FLIR PathFindIR thermal camera. The PathFindIR is ideal for this project, as it is small, does not weigh much and is affordable compared to other available thermal cameras. It has low power dissipation and can operate from - 40 °C to 80 °C. Should the temperature decrease below - 40 °C, the heating element is switched on, therefore allowing images to be transmitted in cold environments.

A modulator and IF converter are used to generate the video signal on the required frequency. This signal is then amplified to 1 W. These modules can operate between 470 and 862 MHz.

From previous research it has been confirmed that all output power for communication must be at least 5 W [10] for search and rescue applications. A 1 W video output power was used to prove the concept of the research, due to the restricted permission obtained from the South African authorities (the independent communications authorities, ICASA and the state owned signal broadcaster Sentech (Pty.) Ltd.) for using television frequencies. It is suggested that a video frequency is assigned for search and rescue purposes so that the output power can be increased to 5 W.

A block diagram of the interconnection between the PathFindIR, converter/modulator, microphone, audio preamplifier, video amplifier and antenna is shown in figure 2.

A Teac 7" flat screen television is used for the reception of the video transmission. Any television could be used, but a television size that will be easy to install at the control station is recommended.

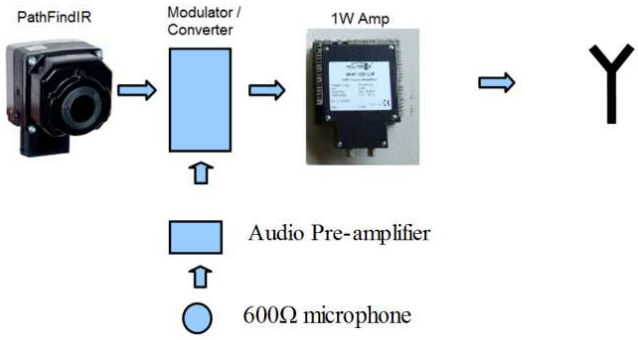

Figure 2: PathFindIR connected to the modulator/ converter, 1 W UHF amplifier, audio preamplifier and antenna[12]

The audio input to the video transmitter needs to have an impedance of 600 Ω and a maximum voltage of 1 V_{P-P} or 0.775 V_{RMS}. A 600 Ω dynamic microphone was initially connected to the input of the audio channel as there was no verification as to whether the transmitter had a build in preamplifier. This did not seem to work, so a mono microphone preamplifier is used to amplify the signal from the dynamic microphone. While the preamplifier is connected to the transmitter, the preamplifier output is tested on an oscilloscope and the gain is altered to get a maximum output of 1 V_{P-P}. The schematic of the microphone preamplifier is shown in figure 3 [11].

The dynamic microphone used is manufactured from plastic which will result in a problem at high temperatures. Research has been performed to determine the availability of high temperature microphones but the research proved

R & D Journal of the South African Institution of Mechanical Engineering 2012, 28, 1-9
http://www.saimeche.org.za (open access) © SAIMechE All rights reserved.

unsuccessful. It was therefore decided to continue using the plastic microphone to enable the testing of the principles being discussed.

2.2 Data Communication

The Radiometrix narrow band FM multi-channel UHF TR2M-433-5 transceiver modules are used for the data communication. These data modules will be valuable for the USAR robot. It enables the programming of the modules to operate on the frequencies supplied by the fire department. The power consumption is low which is vital for power saving. With this large range of operating temperatures the heat from the outside could be insulated and limited to the module.

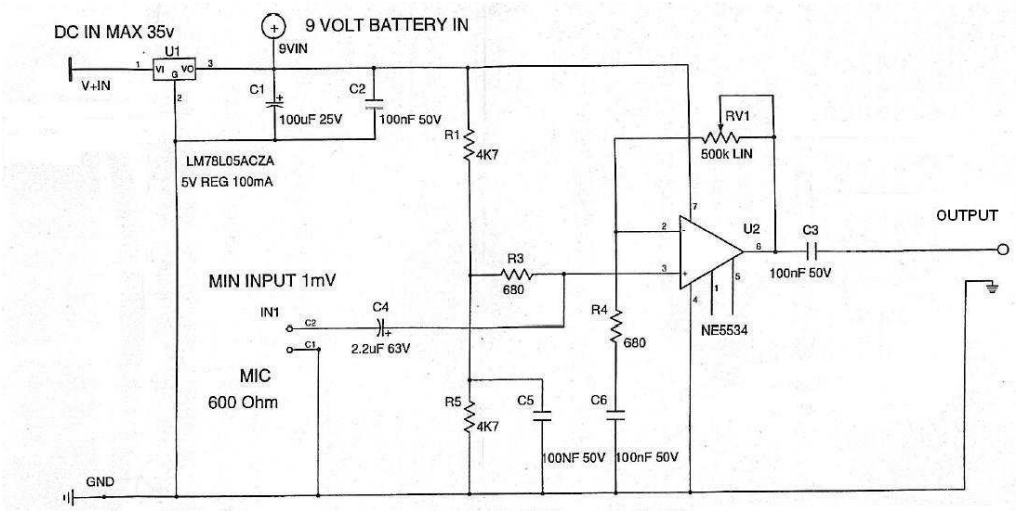

Figure 3: Schematic of the microphone pre-amplifier

The only problem that occurs regarding these modules is their inability to transmit more than 10 mW. An output power of 5 W is required for efficient communication with the restrictions of buildings and other power absorbers. A RF amplifier is needed to solve this problem.

RF amplifiers that amplify 10 mw to at least 5 W are either not readily available or they are expensive. In order to solve this problem, the final stages of a Motorola MCX100 radios were used. The need arose for two of the three RF amplification stages as the amount of power that these final stages produce is sufficient, whereas the three final stages produce more than 5 W output power. Refer to figure 4 for the interconnection of these stages. The disassembly and reconstruction of these stages require the addition of discrete components. Not all the modules in the radio were used.

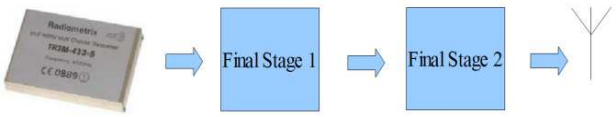

Figure 4: Transmission process block diagram[12]

These impedances of the missing modules are to be replaced. The circuit of the RF amplifier is traced with a probe to determine the amplification of each stage. There are two positive power supply points. While tracing the power point that was not powering the circuit of the first stage of the RF amplifier, a discontinuation for a closed loop circuit was found. This closed loop circuit was terminated to another module not used. By modifying the impedance on this point, a different output power was produced from the RF amplifier. It was determined that a resistance of 680 Ω made the RF amplifier produce the required 5 W output.

A problem occurred in the reception, as the signal was not able to reach the TR2M module from the antenna due to the RF amplifier not being bi-directional. This could possibly be solved by connecting the antenna directly to the TR2M module and then reception would be possible, but the high output power from the RF amplifiers would terminate the operation of the TR2M module, as there is high power penetrating the sensitive module.

This problem was solved by the implementation of a switching circuit on the output to the antenna. Figure 5 illustrates the concept of this circuitry. While the two

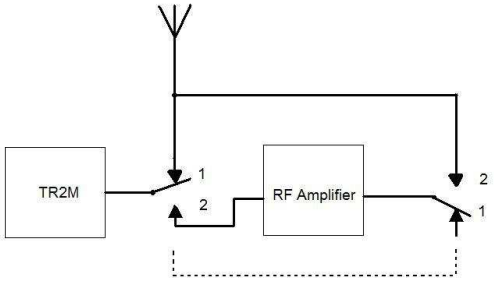

Figure 5: TR2M and RF Amplifier with the appropriate switching[12]

relays are in position 1, the TR2M module can receive data. Should the TR2M module need to transmit, then the

 © SAIMechE All rights reserved.

relays are switched over to position 2, which will connect the TR2M module to the RF amplifier and in turn with the antenna. This prevents the need for two antennas and allows for only one radio module for data communication at each station.

A layered model similar to the OSI model is needed for data communication. Each layer has its unique task to optimize the communication. The advantage of having a layered model is that each layer can be modified and optimized without affecting the other layers. The layered model can be represented as indicated in figure 6 [12].

This model has been divided into three layers as each layer will be controlled by a separate module or microcontroller. The physical layer consists of the hardware that will be used. In the case of the USAR robot, this will be the radio modules that will act as the transceivers.

Application
Data link / Transport / Session / Presentation
Physical

Figure 6: A three layered model

The layer that is a combination of the data link, transport, session and presentation will be controlled by a single microcontroller. The data link layer is in control of the packets, that are being sent, while the transport and session layer is responsible for the packet's control and transmission permission respectively. All the received data must be presented in a format for the computer to understand. This is achieved by the presentation layer. This layer of this model is represented by the robotics communication protocol (RCP) [13]. The robotics communications protocol is a set of procedures for slow speed communication between robotic devices [14] . The microcontroller that is used for this layer is thus an intelligent router, feeding data and verifying it between the radio modules and physical and application layers.

The application layer is involved in the displaying of the information and with the interaction with the user. This layer is also involved in the output, being the movement of the motors and any other attachments of the robot. This layer is controlled by a microcontroller which could be attached to other microcontrollers or modules, depending on the complexity of this layer.

3. Motor Driver Controller

The four motors are controlled by a single microcontroller via H-bridges. A motor is used for each side tracks and the turning of the set of arms in the front and back of the robot as shown on the CAESAR in figure 7.

The CAESAR robot will be remotely controlled, but should relieve the controller of deciding whether the obstacles in front of it are large enough for transformation to be required. The parking radar sonar sensors are used for this task.

Avago Technologies HEDS 5500 encoders are used on the flipper arms shafts to determine the angle of the front or back arms. This enables feedback to the micro-controller to verify the arms angle and orientation. A cup system connected to a shaft is developed to allow the encoder to turn, coinciding with the turning of the external shaft of the flipper arms. This is shown in figure 8.



Figure 7: The CAESAR robot being tested on rubble terrain. It consists of two side tracks, a set of arms in the front and the back[17]



Figure 8: Flipper arm orientation encoder system

It is useful to be able to determine the orientation of the robot with respect to the front and rear of the chassis. This indicates to the controller and the robot at what incline it is presently ascending and also whether the robot is upside down or in the correct orientation.

To determine orientation, a weight shaft is developed that is inserted into the encoder. The weight shaft is always aligned by gravity. As the robot climbs an inclination, the weight shaft will move from its zero

http://www.saimeche.org.za (open access) © SAIMechE All rights reserved.

position, and the angle can be determined. This configuration is shown in figure 9 [17] .

With the CAESAR robot in automatic mode, these transformations occur automatically. There might be times that the user would desire to override the autonomous transformation and would prefer to transform manually, which have been provided for.

The CAESAR robot detects objects via the ultrasonic distance sensor up to a distance of about 400 mm. The reference of angles is calculated from the point where the flipper arms are contracted within the body. The reference to the front of the CAESAR robot refers the side that it is travelling forward, while the rear side is considered to be the opposite side. There are different scenarios to be considered.

In a situation where the CAESAR robot might be travelling in a horizontally position, the default position for the front and rear flipper arms will be at 150°. This allows for stabilization as it manoeuvres over a rough terrain. Should there be a small undetected object in front of the robot, or a small ditch that it has to cross, the slight angle of the flipper arms will assist it to continue with movement.



Figure 9: Weighted shaft and encoder

In the event that the CAESAR robot might travel in a horizontal position and approach an obstacle, the front flipper arms will move to 135°, while the rear flipper arms will move to 150°. This allows the CAESAR robot to move over the obstacle, while supporting the rear side as it climbs the inclination.

While the CAESAR robot is climbing an inclination and no object is detected, the front flipper arms will be at 150°, while the rear flipper arms will be at 135°. Should an object be detected while on the incline, the front flipper arms will move to 135°.

In the event that the CAESAR robot is on a decline and no object is detected, the front flipper arms will move to 135° and the rear flipper arms will move to 150°. This will support the front of the CAESAR robot should it approach or slide to an object. It would seem as if an object is being detected when the CAESAR robot approaches a horizontal terrain. With the front flipper arms at 135°, it will assist it to stabilize on the horizontal terrain.

4. Sensor Microcontroller

The AT-Mega8L micro-controller is used to read the voltages received from the different sensors. As this micro-controller has 6 A/D converters, it allows up to six sensors that give a voltage output to be connected to it. Other sensors that might use other protocols could also be connected to this micro-controller should it be required.

The gas sensors used to monitor the environment are carbon dioxide, methane, carbon monoxide, oxygen and hydrogen sulphide sensors from Figaro. As the gas sensors supply a voltage depending on the gas concentrations, a communication system is used to indicate which sensor's reading must be sent to the control station. This is indicated with a character that corresponds to the port on the micro-controller. In the event that the control station requires all the sensor data at once, a corresponding instruction sends all the sensor values back, each being separated by a colon character.

A graphics user interface (GUI) was developed for the control and analytical computations of CAESAR's environmental conditions. A layout of the GUI is shown in figure 10. Figure 10 shows three sections to the GUI. The video feedback from the robot is shown on the right, while the movement control is shown in the centre. The left-hand side of the GUI indicates the health status of the robot (battery and internal temperature) and the different gas concentrations.

Using the different gas concentrations, the robot and human danger is calculated by the derived models [13] using equation 1.

$$Danger = (100/2n)\ w_u p + w_d q \qquad (1)$$

The above model will give a percentage of danger for humans. As the number of unsafe and dangerous factors for humans' increases, the model increases the percentage value. A model is also required for the danger to the robot. Carbon dioxide and oxygen does not have a weighting factor, as these gases are not flammable or cannot self-ignite. This danger for the robot is expressed by the model shown in equation (2).

Should any one gas have a concentration that is higher than $flammable_{min}$, the environment is considered to be 100 % dangerous for the robot. The danger for the robot could increase as other gas concentrations increase, but it will never decrease below the highest danger percentage.

Equation (2) could be used to determine the danger or unsafe value for humans, but D_n will be the danger or unsafe value that gas n has on humans. This is a more accurate result compared to equation (1), which only monitors the limits of the gas concentrations.

http://www.saimeche.org.za (open access) © SAIMechE All rights reserved.

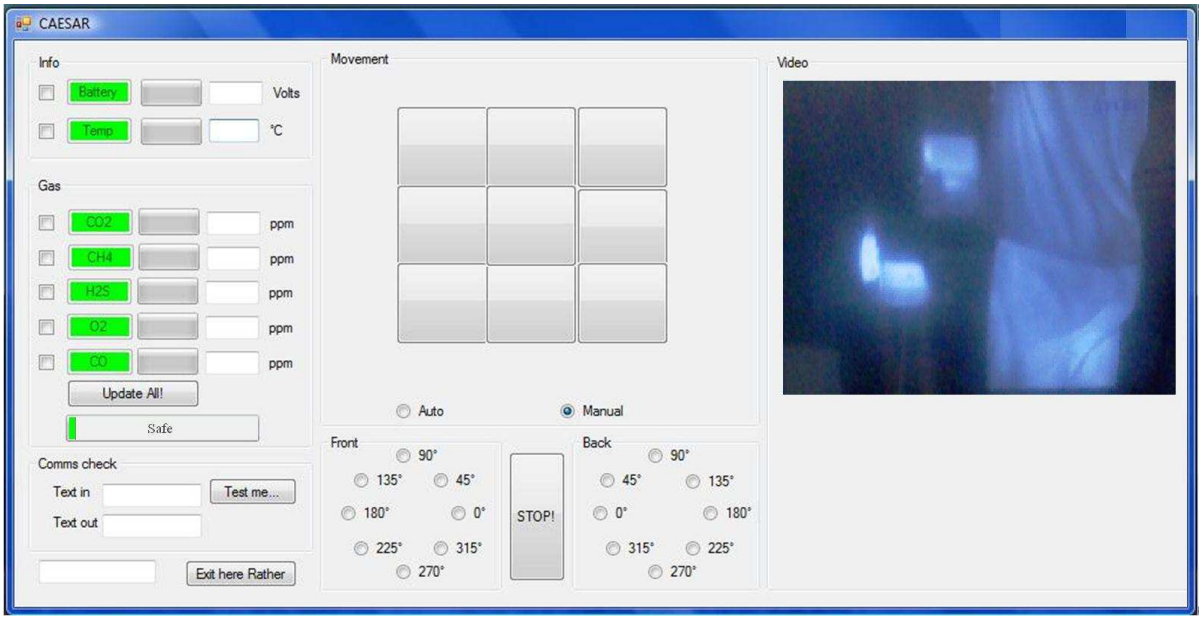

Figure 10: GUI used for CAESAR's control. The environmental aspects are also shown with CAESAR's health status[17]

$$Danger_{robot} = Gas_{HighestConcentrationPercentage} + \left(\left(\frac{100}{m}\sum_{n=1}^{n=m}\frac{x_n}{D_n}\right)\left(\frac{100 - Gas_{HighestConcentrationPercentage}}{100}\right)\right) \quad (2)$$

5. Microcontroller And Module Integration

As the RCP module is a router for communication between the radio transmitter and the application modules, it must be able to switch the serial connections to the appropriate module. This is achieved with AND gates, that selects the serial connection to the module by a switching mechanism from the RCP module. This is indicated in figure 11.

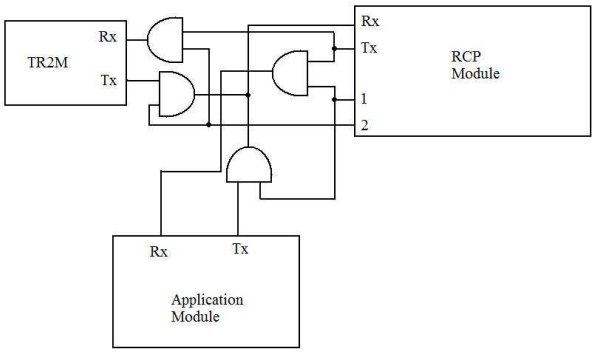

Figure 11: RCP switching circuitry with AND gates

More application modules can be added with the inclusion of two AND gates and an output pin from the RCP module. A combination of outputs generating a specific binary number is used to switch between communication modules. A combined system integration used by the CAESAR robot is shown in figure 12 [17] .The system block diagram that was used by the control station is shown in figure 13.

6. Mechanical Construction

The important factors that necessitate focus with regard to the body of the robot are the durability and transformability.

Different designs and concepts have been considered, but essentially the need is for a robot that will is able to move

over obstacles as well as in confined spaces. A tracked robot is therefore considered as the pulling force of tracks is 30 % more efficient than normal wheels[6]. This specification resulted in a decision for a tracked robot that is able to transform its shape, enabling it to manoeuvre across occurring obstacles in its way.

This led to a decision to use arms with tracks on it that will push the robot over obstacles yet also allowing the robot to have a greater surface contact when climbing stairs. The primary advantage of the flipper arm

http://www.saimeche.org.za (open access) © SAIMechE All rights reserved.

configuration is that it allows the robot to be invertible (i.e. the robot can be placed upside down and would still function), and reversible (i.e. the robot can operate in a reverse direction just as capable as it would in the forward direction). A model of the design that was finally decided on is shown in figure 14.

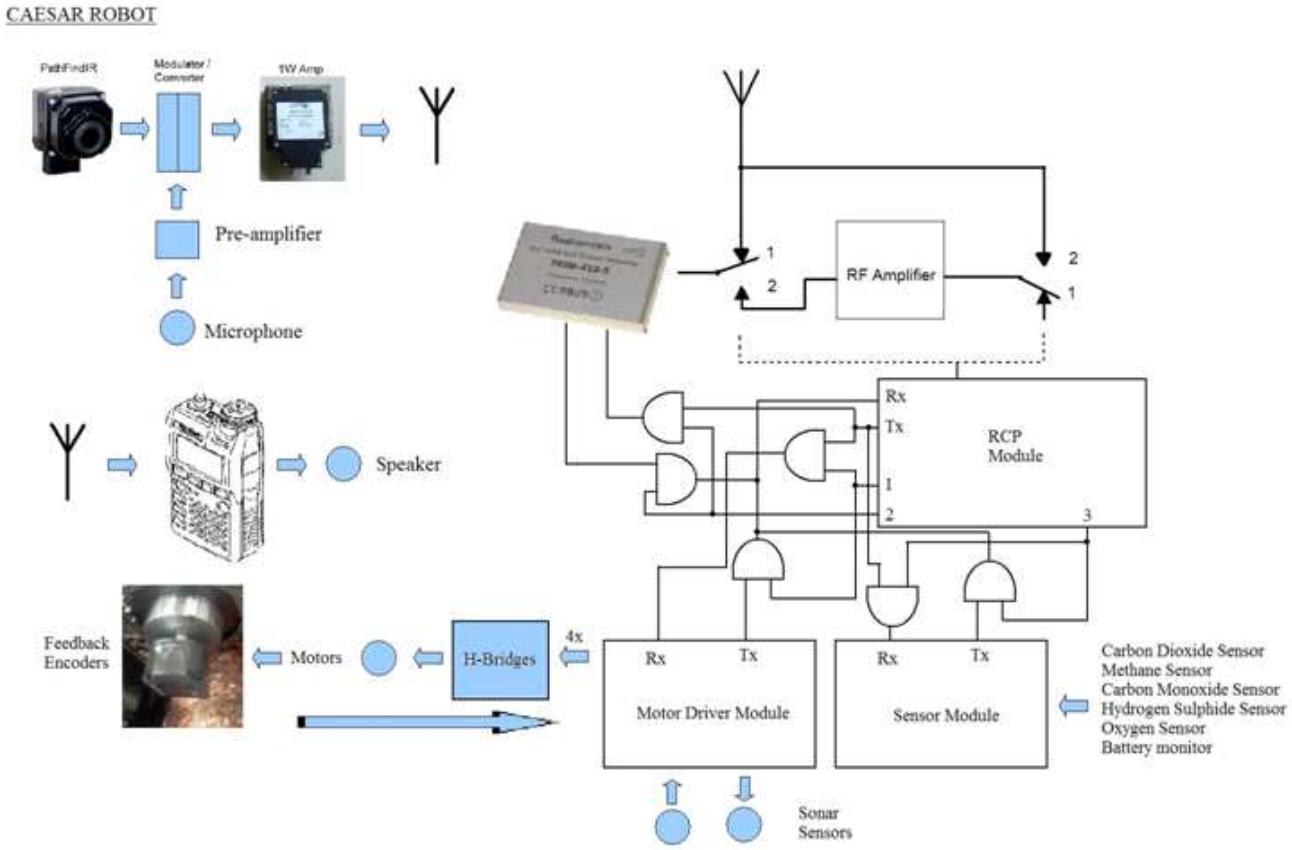

Figure 12: CEASAR robot system block diagram

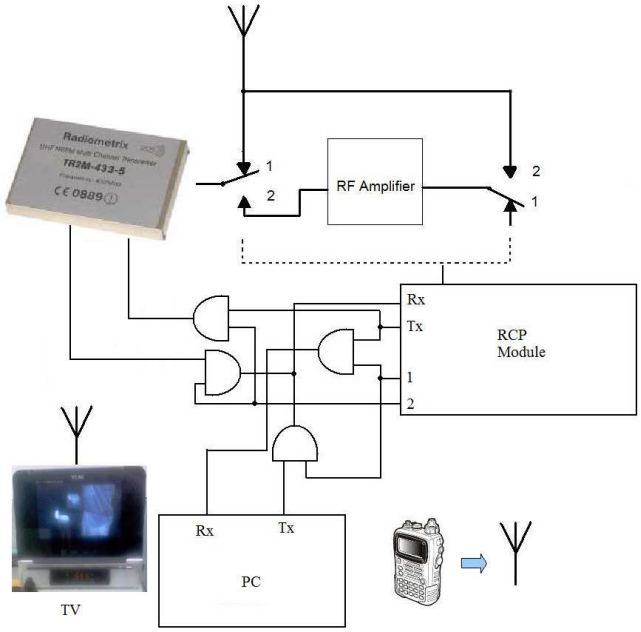

Figure 13: Block diagram used at the control station

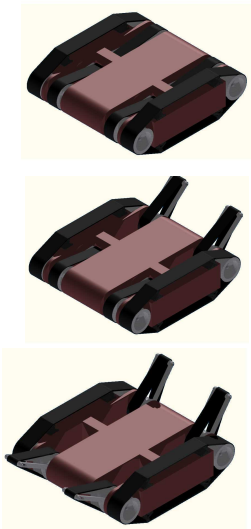

Figure 14: CAESAR robot transformation configuration

The decision was taken to fabricate the body of the robot from composite materials to save weight and to control the thermal transmission gradient between the operating environment and that of the electronic components inside. The alternatives (constrained by availability) namely metals have high thermal transmission coefficients and high density and would therefore be less suitable. The layout of all the modules and components described in figure 12 are shown in figure 15 .

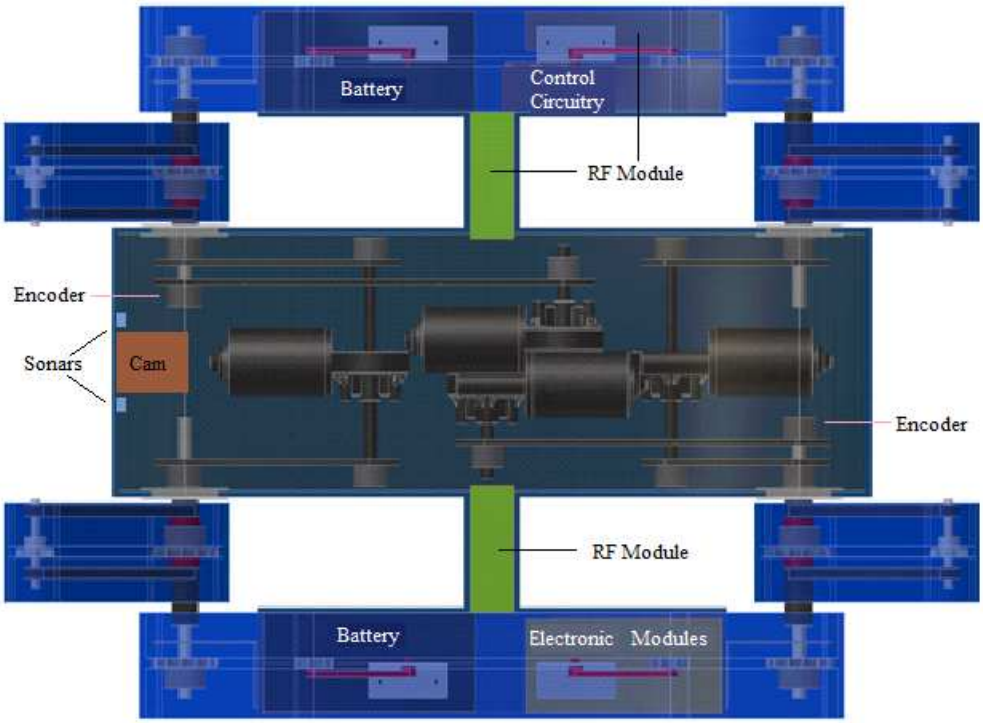

Figure 15: Layout of the internal modules, which include the electronic components motors and drive system[17]

7. Conclusion

Field testing was performed at the local fire department training centre. All communication was successful, but the video reception through the building material was poor due to the use of a 1W instead of a 5 W RF amplifier.

Vital gas information was sent back, and with the use of the developed models, warnings for different safety and danger environments were given. Autonomy of transformation of the CAESAR robot allowed for ease to manoeuvre over obstacles, which is only possible with the feedback encoders and sonar sensor.

System integration of the control station and within the CAESAR robot has been discussed. The system used allows for reliable communication between the robot and the control station even with the unstable environment. Voice communication is possible to interact with the victims, while video feedback allows for voice communication from the victim and to view the dangers in the surrounding environment. Data communication integrated with the RCP system allows for reliable data communication between system. Instruction can be sent to the CAESAR robot, and vital environmental information can be sent back to the control station.

A comparison of CAESAR with other USAR robots such as those used at the World Trade Centre [16] is shown in table 1. The vehicle properties that CAESAR has improved on are indicated in red. Improvements that CAESAR features that the other vehicles do not are indicated in blue.

Since the CAESAR robot represents the development of a prototype system, the initial estimated costs for development have been approximated R500000 per robot.

Further research should be performed in the development of microphones and speakers that are able to withstand high temperatures. An explanation is given for the video communication between the thermal camera and a television receiver for a successful observation of the robot's surrounding environment.

With the incorporation of the above system, it has made it possible to have a robot that will assist the rescue workers and fire fighters in rescue attempts. Victims can be located, and dangerous environments can be observed. Confined spaces can be entered and searched, without risking the lives of rescue worker unnecessary when there are no living victims in these dangerous environments.

http://www.saimeche.org.za (open access) © SAIMechE All rights reserved.

Table 1: CAESAR compared to other USAR robots

	TALON	SOLEM	VGTV	ATR X-50 [15]	URBOT	PACKBOT	CAESAR
Size (LxWxH)	864 x 572 x 279 mm	508 x 375 x 203 mm	317 x 165 x 65 mm	950 x 650 x 350 mm	838 mm long	687 – 864 x 152 x 435 mm	730 – 1090 x 700 x 364 – 395 mm
Weight (kg)	39	15	Not Available	84	27	18	56
Max Incline angle (°)	Not Available	Not Avaiable	15	15 - 20	Not Available	45 - 55	30 - 45
Speed (m/s)	1.8	0.46	0.08	0.5	0.76	3.7	0.07
Power Supply	4 NiMH batteries	4 NiMH batteries	Tether	On-board Battery	On-board Batteries	On-board batteries	On-board batteries
Communication	2 W	1 W	Tether	2.4 GHz TCP/IP	Wifi	2.4 GHz Wifi	UHF - 5 W
Vision	4 color cameras	Color CCD camera	Color CCD camera	CCD camera	1 zoom camera and 2 cameras on top and bottom	Low light camera / Color CCD camera	Thermal camera transmitted wireless - 1W
Lighting	User selected	User selected	2 halogen headlights	Non specified	2 halogen headlights	2 halogen headlights	None – thermal imaging
Other Sensors	Encoders, 3 axis compass, arm position	Encoder, 3 axis compass, arm position	Encoders	Encoders, compass, infrared rangefinder	Altitude, compass, temperature	Optional – Indigo Alpha FLIR	FLIR Thermal camera, tilt (pitch and roll), gas sensors, arms position encoders, temperature, sonar, audio comms

References

1. *Wiens, K*, Bread Crumbs and Robots May Save Your Life, *SciTini*, http://www.bu.edu/phpbin/news-cms/news/?dept=1127&id=41128&template=226, 18 October 2006.
2. *Casper, J and Murphy, R,* Human-robot interaction during the robot-assisted urban search and rescue response at the World Trade Center, *IEEE Transactions on Systems, Man and Cybernetics*, Part B, Cybernetics, 33(3), 367-385, June 2003.
3. 9/11, Directors: Naudet, J, Naudet, G and Hanlon, J, A Goldfish Pictures Inc., Silverstar Production, LLC Production, Paramount Pictures, 2002.
4. *Kleiner, K*, Better robots could help save disaster victims, New Scientist Tech, http://www.newscientist.com/article/dn8536-better-robots-could-help-save-disaster-victims.html, 5 January 2006.
5. *Greer,D, McKerrow, P and Abrantes, J,* Robots in urban search and rescue operations, *Proceedings of the Australasian Conference on Automation*, Auckland, 25-30, 27-29 November 2002.
6. *Carlson,J*, Analysis of How Mobile Robots Fail in the Field, MSc Thesis, Department of Computer Science, University of South Florida, March 2004.
7. *Stopforth, R and Bright,G,* Required improvements and possible solutions for urban search and rescue (USAR) robots, *International Conference on Automation, Robotics and Control Systems* (ARCS-08), Orlando, USA, July 2008.
8. Yaesu VX-7R Operating Manual, Vertex Standards Co., Ltd., Japan, 2002.
9. Yaesu VX-3E Operating Manual, Vertex Standards Co., Ltd., Japan. 2007
10. City of Orlando Fire Department, Arson/Bomb Squad, Lt. Dale Reynolds, bomb squad commander, July 2008.
11. ProQuip Sound, Excellence in Audio, Line & Mic Pre-Amplifiers datasheet, January 1998.
12. *Stopforth, R, Bright, G and Harley, R*, Communication and artificial intelligence systems used for the CAESAR robot, *Mobile Robots Navigation*, InTeh, Vukovar, Croatia, March 2010.
13. *Stopforth, R, Bright, G and Harley, R*, Robotic communication protocol (RCP), *2nd Symposium in Mechatronics and Robotics*, Bloemfontein, South Africa, November 2008.
14. *Stopforth,R, Bright,G, Davrajh, S and Walker, A*, Improved communication between manufacturing robots, *South African Journal of Industrial Engineers*, 22(1), 99-107, May 2011.
15. *Messina, E and Jacoff, A,* Performance Standards for Urban Search and Rescue Robots, Intelligent Systems Division, National Institution of Standards and Technology, USA, 2006.
16. *Shah,B and Choset, H,* Survey on Urban Search and Rescue Robotics, Carnegie Mellon University, Pittsburgh, PA, USA, 2003.
17. *Stopforth,R Bright,G and Harley, R,* Performance of the improvements of the CAESAR robot, *International Journal of Advanced Robotic Systems*, 7(3), 217-226, ISSN 1729-8806, September 2010.

http://www.saimeche.org.za (open access) © SAIMechE All rights reserved.